INSTITUT FÜR FLUGFÜHRUNG
TECHNISCHE UNIVERSITÄT BRAUNSCHWEIG

O. PROF. DR.-ING. G. SCHAENZER

Studienarbeit

für

Herrn Jürgen Joachim Burmester

Matrikelnummer: XXX

Untersuchung eines Systems zur

Gewinnung großer Mengen Sauerstoff an Bord

von Passagierflugzeugen

DA01961E/1-12/98

Content

1. Introduction and Formalities 3
1.1 List of Tables 3
1.2 List of Figures 3
1.3 List of Abbreviations 4
1.4 Assignment 6
1.5 Profile of the company European Aeronautic Defense and Space Company 7
2. Theoretical Foundations 8
2.1 Chemistry and Behavior of Oxygen 8
2.2 Atmosphere and Breathing 9
2.3 Certification Requirements, Rules and Regulations 14
2.4 Storage of Oxygen 16
2.5 Distribution Systems and System Architectures 17
2.6 OBOG-Systems 24
2.6.1 Molecular Sieves 24
2.6.2 Electrolysis 26
2.6.3 Electrochemical Membrane 28
2.6.4 Permeable Membrane 29
2.6.5 Chemical Generation 30
2.6.6 Other Methods 31
3. Planning of Design 34
3.1 System Requirements 34
3.2 Evaluation of Received Suppliers Proposals 41
4. Technical Design Proposal 43
4.1 Scope 47
4.2 General 47
4.2.1 General System Description 47
4.2.1.1 Gaseous System 47
4.2.1.2 OBOG System 49
4.2.2 General Requirements 51
4.2.2.1 Holding Altitude 51
4.2.2.2 Aircraft Configurations 51
4.2.2.3 Stored Oxygen Supply 51
4.2.2.4 Breathing Gas at Holding Altitude 51
4.3 Comparison 53
4.3.1 System Architecture 53
4.3.1.1 System Architecture Requirements 53
4.3.1.2 Gaseous Oxygen System 53
4.3.1.3 OBOG System 54
4.3.2 Cost 55
4.3.2.1 Cost Requirements 55
4.3.2.2 Gaseous Oxygen System 55
4.3.2.3 OBOG System 57
4.3.3 System Mass 57
4.3.3.1 Mass Requirements 57
4.3.3.2 Gaseous Oxygen System 57
4.3.3.3 OBOG System 58

4.3.4 Interfaces 58
4.3.4.1 Interface Requirements 58
4.3.4.2 Gaseous Oxygen System 59
4.3.4.3 OBOG System 59
4.3.4.4 Bleed Air Supply/ Conditioning 59
4.3.5 Maintenance 61
4.3.5.1 Maintenance Requirements 61
4.3.5.2 Gaseous Oxygen System 61
4.3.5.3 OBOG System 61
4.3.6 System Dimensions 62
4.3.6.1 System Dimension Requirements 62
4.3.6.2 Gaseous Oxygen System 62
4.3.6.3 OBOG System 63
4.3.7 Lead Times 63
4.3.7.1 Lead Time Requirements 63
4.3.7.2 Gaseous Oxygen System 63
4.3.7.3 OBOG System 63
4.3.8 Nitrogen Purge 64
4.4 Safety Issues 64
4.5 Major Issues 64
4.5.1 Oxygen Masks 64
4.5.2 Regulation Changes 64
4.6 Conclusion of Comparison 65
4.7 General Design Drafts 65
4.7.1 Assumptions 66
4.7.2 Layout of the Planned Distribution System 67
4.7.3 Layout of Oxygen Container 68
4.7.4 Calculated Data 69
4.7.5 Function of Flow at the Farthest Mask for Different Configuration 71
4.7.6 Changes and Effects on the System 72
4.8 Further Proceedings 73
4.8.1 Increase of Bleed Air Pressure 74
4.8.2 Feasibility of Pressure Intensifier 74
4.8.3 Crew Mask Modification 74
4.8.4 Distribution System Modifications 74
4.8.5 Replacement of Oxygen Cylinders by Chemical Generators 74
5. Résumé 76
6. Appendix 78
6.1 Literature 79
6.2 Conversion Tables 80
6.3 Laws and Legal Provisions 81

1. Introduction and Formalities

1.1 List of Tables

Table 1: Chemical Components of Air
Table 2: Typical Symptoms of Oxygen Lack in Different Altitudes
Table 3: Different Types of High Pressure Oxygen Cylinders
Table 4: Comparison of conceivable oxygen generation methods
Table 5: Required Oxygen Flow to the Passenger Oxygen System at Different Altitudes
Table 6: Required Oxygen Flow per Person to the Crew Oxygen System at Different Altitudes
Table 7: Summary of Environmental Test Requirements
Table 8: Maximum Bleed Air Contamination Concentration
Table 9: Number of High Pressure Cylinders at 20kft Holding Altitude
Table 10: Cost of a Gaseous Oxygen System
Table 11: Weight of a Gaseous Oxygen System
Table 12: Space Envelope of a Gaseous Oxygen System
Table 13: Comparison of Systems
Table 14: Required Data for Four Design Cases
Table 15: Required Data for Four Design Cases
Table 16: Calculation Results Case #1
Table 17: Calculation Results Case #2
Table 18: Calculation Results Case #3
Table 19: Calculation Results Case #4
Table 20: Conversion of Length
Table 21: Conversion of Volume
Table 22: Conversion of Pressure

1.2 List of Figures

Figure 1: U.S. Standard Atmosphere 1962
Figure 2: Human Breathing Cycle
Figure 3: Oxygen Requirements-Altitude-Descent Time
Figure 4: Gaseous Crew Oxygen System
Figure 5: Gaseous Passenger Oxygen System
Figure 6: Schematic Description of Possible OBOGS Architectures
Figure 7: Output Flow of a Three Bed MSOC
Figure 8: Two Bed Molecular Sieve OBOGS Principle
Figure 9: Principle of Electrolysis
Figure 10: Function Principle of a SPE-electrolysis OBOGS
Figure 11: Principle of Electrochemical Membrane
Figure 12: Air Separation Module of a Permeable Membrane OBOGS
Figure 13: Current Gaseous Oxygen System
Figure 14: Integration of OBOGS in Crew and Passenger Oxygen System
Figure 15: Schematic of an OBOGS Architecture
Figure 16: Available Space Envelope
Figure 17: Typical Seat Layout of a A340-500/600
Figure 18: Exemplary Part of Planned Distribution System Layout

Figure 19: Pattern of the distribution system
Figure 20: Schematic Layout of Oxygen Container
Figure 21: Function of Flow at the Farthest Mask for Different Configuration
Figure 22: Option for Chemical Oxygen Generation for Emergency Descent
Figure 23: Technical Design Proposal

1.3 List of Abbreviations

A/C	Aircraft
ABD	Airbus Directives
ACJ	Acceptable Means of Compliance and Interpretations (JAA)
AI	Airbus Industry
AIR	Aerospace Information Report
AMC	Acceptable Means of Compliance (JAA)
ARINC	Aeronautical Radio Inc.
ATA	Air Transport Association
ATPD	Ambient Temperature, Pressure (environment) Dry (P_{H_2O} = 0 bar)
BITE	Built In Test Equipment
BMBF	Bundesministerium für Forschung und Technologie
BTPS	Body Temperature, Pressure (environment), Saturated (P_{H_2O}=0,0626bar)
BTPD	Body Temperature, Pressure (environment), Dry (P_{H_2O} = 0 bar)
CC	Cubic centimeter
CFCU	Centralized Flow Control Unit
CIC	Control and Indication Circuit (of A/C)
CMC	Centralised Maintenance Computer
CS%	Source Oxygen Concentration
CT%	Oxygen concentration at the trachea
dB	Decibel
DOT	Department of Transportation
ETOPS	Extended Twin Operation System
FAR	Federal Aviation Regulations
FH	Flight Hours
FL	Flight Level
Ft	Feet
Hz	Hertz
ISA	International Standard Atmosphere
ISE	In-Service Evaluation
ISO	International Standardization Organisation
JAR	Joint Airworthiness Requirements
L	Litre
LPM	Litre per minute
LROPS	Long Range Operations
Min	Minute
MSOC	Molecular Sieve Oxygen Concentrator
MTBF	Mean Time Between Failure
MTBUR	Mean Time Between Unscheduled Removals
N/A	Not Applicable
NTPD	Normal Temperature (21,11°C/70°F), Pressure (1,013 bar), Dry (P_{H_2O} = 0)
OBIGGS	On Board Inert Gas Generating System
OBOGS	On Board Oxygen Generating System

OBONGS	On Board Oxygen and Nitrogen Generating System
OMS	On Board Maintenance System
Pax	Passengers
PSA	Pressure Swing Adsorption
PSIA	Pounds Per Square Inch Absolute
PSIG	Pounds Per Square Inch Gauge
RL	Riser Line
RLSOV	Riser Line Shut Off Valve
RPSA	Rapid Pressure Swing Adsorption
SAE	Society of Automotive Engineers
SPE	Solid Polymer Electrolyte
SRD	System Requirement Document
STPD	Standard Temperature (0°C), Pressure (1,013 bar) , Dry (P_{H_2O} = 0)
TSO	Technical Standard Order
TDD	Technical Design Directive
TUC	Time of Useful Consciousness
V	Volt, Voltage
w.a.	without author

1.4 Assignment

Examination of a system which produces large quantities of oxygen on board of commercial aircrafts

In commercial aviation, there are a considerable number of regulations concerning the supply of oxygen, under emergency conditions, which need to be considered for the safety of both crew and passengers.
At altitudes above 10000ft, the air in the environment is not suitable for breathing because the oxygen partial pressure is too low to allow sufficient transfer of oxygen into the bloodstream.
If an emergency situation, such as a cabin decompression occurs, both crew and passengers have to be supplied with an oxygen enriched breathing gas, until the aircraft has descended to a safe air breathing altitude (below 10000ft). As fuel supplies are consumed more quickly at lower altitudes, this often forces the aircraft to divert to a nearer airport then originally planned.

Some routes (Himalayan, Northern Arctic and Southern Pacific) are currently excluded as the nearest airport that the aircraft could divert to, is too distant to be flown at 10000ft (due to insufficient fuel supplies and high diversion costs). In order to open up these routes, it would be necessary to remain at altitude following an emergency decompression.

The aim of this study is to describe the characteristics of a system which, in the event of an emergency, delivers enough oxygen for supply to crew and passengers, which would allow the aircraft to continue flight at high altitudes.
Considering the proposals of suppliers, a draft system concept is to be created, which includes estimations of the following aspects:

- weight
- power consumption
- safety
- space envelope
- air supply
- maintenance
- supervision of the system
- readiness of the „sleeping system“
- redundancy
- analysis of costs

The result is represented in form of a “Technical Design Proposal” in the English language. It is embedded in the whole studying work which details the subject more comprehensively. For the study a duration of four month is estimated, it is done in the department ESF 1 Oxygen Systems at Dasa Finkenwerder/Hamburg.

counsellor: Dipl.–Ing. Wilhelm Lutzer
New Technologies
Kreetslag 10
21129 Hamburg
Fon 0 40/74 37 - 27 53
Fax 0 40/74 37 - 54 17

begin: 15. 05. 00
finish: 30. 09. 00

1.5 Profile of the company European Aeronautic Defense and Space Company (EADS)

The following section based mainly on facts and investigations by [7] Plath, D./ Figgen, A., Verkehrsflugzeuge, „Der schwierige Weg zur Airbus Industrie“, Weltbild Verlag GmbH, Augsburg, 2000, Page 39 and Bardenhagen, Andreas, Intranet DASA, http://intra.airbus.dasa.de/l/up/, April 2000.

In the early sixties, Weser Flugzeugbau GmbH & Focke Wulf GmbH merged to form VFW GmbH.
In the late sixties Heinkel Flugzeugwerke GmbH merged with VFW GmbH, and the new company retained the name VFW GmbH.

In the early Fifties Junkers AG and Messerschmitt AG merged, and were joined in the early sixties by Bölkow GmbH, in a merger that formed Messerschmitt Bölkow GmbH. In the early seventies, Messerschmitt Bölkow GmbH and Hamburger Flugzeugbau GmbH merged to form MBB GmbH.

In the early eighties, MBB GmbH merged with VFW GmbH, and the new company retained the name MBB GmbH.

In the mid eighties, the company MBB GmbH split to form two companies, MBB GmbH and Deutsche Airbus GmbH. Deutsche Airbus GmbH was formed as a 37,9% holder of the Airbus company, in partnership with Aerospatiale (37,9%) of France, British Aerospace (20%) of Great Britain, and CASA (4,2%) of Spain.

After the acquisition of Daimler-Benz, Deutsche Airbus GmbH, was renamed as DaimlerBenz Aerospace Airbus GmbH.

In 1998 Daimler-Benz aerospace Airbus GmbH merged with Chrysler, to form the company DaimlerChrysler Aerospace Airbus GmbH.

Early this year, the new company “European Aeronautic and Defense company” (EADS) was formed by a merger of DaimlerChrysler Aerospace Airbus GmbH, Aerospatiale and CASA which now becomes an 80% shareholder of Airbus.

The company currently holds a 55% market share in commercial aircraft, with a product range consisting of the A300-600, A300-600 “Beluga”, A310, A319, A320, A321, A330 and A340.

New projects due to be in service within two years include the A318 and the A340-500/600. Future products currently being worked on include the A3XX, which will be the world largest passenger aircraft, a new supersonic airjet (SCT), and an alternative fuel aircraft (Cryoplane).

In 1999, DaimlerChrysler Aerospace Airbus, now EADS Germany, employed approximately 16000 people, and a had turnover of €9 Billion, and operating profits of € 700 million. The company also released €265 Million for research and development.

2. Theoretical Foundations

2.1 Chemistry and Behavior of Oxygen

The main facts and data in this section is taken from literature [10] and [12] mentioned in the appendix in further detail.

In 1770, the element oxygen was discovered. With 46,6 mass%, it is the most founded element on earth. Free oxygen is mainly found in the air, however oxygen molecules are also a major constituent of water, organic material and most types of stone. Normally oxygen appears in the form of molecular dioxygen, however in special layers of the atmosphere trioxygen (ozone) is found.
Oxygen is solid at temperatures below -219°C (at 1013mbar) and liquid at temperatures between –219°C and –183°C (at 1013mbar). Above –183°C oxygen is gaseous (at 1013mbar). The critical point of oxygen is fixed at –118°C. Above this temperature oxygen is always gaseous (pressure independent). Below -118°C the liquefaction temperature depends on pressure: the lower the pressure, the deeper the liquefaction temperature. The evaporation of one liter liquid oxygen produces 860 liter gaseous oxygen (1013mbar, 20°C). Gaseous oxygen is colorless, odorless and tasteless. It reacts with a lot of other elements in a reaction called Oxidation. Oxidation happens at various rates. Examples of slow oxidation are the rusting of iron, decaying of organic material or aging of rubber. Fast oxidation with the appearance of fire is called combustion. The more oxygen present during combustion, the faster and more intensive it runs .
The make up of all organisms includes oxygen, as oxygen is necessary to support life in nearly all organisms. Flowers and Plants create oxygen naturally through photosynthesis. In presence of leaf green, Carbon Dioxide is bound under the reception of light energy to organic substance. During this process, oxygen is produced as a by-product, and emitted to the surrounding atmosphere. The atmosphere has got an average oxygen content of 20,946%. It is relatively constant from the earth surface to altitudes in range of 100km.
In aviation, oxygen is applied as breathing oxygen. This breathing oxygen has got a stipulated grade of purity of 99,5% and a maximum grade of humidity of 0,005 grams per cubic meter at 1013 mbar and 21°C.

Chemical Symbol:	O (Latin Oxygenium = acid former)
Modifications:	Dioxygen (ordinary oxygen)
	Trioxygen (Ozone)
Melting point:	-219°C at 1013 mbar
Boiling point:	-183°C at 1013 mbar
Density liquid:	1,14 kg/dm^3
Density gaseous:	1,43 kg/m^3
Critical point:	-118°C (180,4°F) the oxygen becomes gaseous under any pressure

Pure oxygen can be produced artificially, by procedures such as the Linde–procedure. This particular procedure utilizes fractional condensation and distillation. Air is compressed causing it to warm up. This heat is then taken away. The air is then allowed to expand, and cooling under the initial temperature takes place. This process is repeated, continuously cooling the air, until the oxygen contained in the air liquifies (-183°C at 1013 mbar). Now the oxygen can be separated from the nitrogen, as nitrogen remains gaseous at this temperature (Nitrogen liquifies at –196°C). The oxygen can then be stored and transported in liquid form.

2.2 Atmosphere and Breathing

The main facts and data in this section is taken from literature [10] and [12] mentioned in the appendix in further detail.

The gaseous enclosing of a celestial body is described generally as atmosphere. According to present knowledge, the atmosphere of the earth is reaching up to an altitude of approximately 2000km. The concentrations of the different gases be contained in the atmospheric air stay nearly constant up to an altitude of 100km. Water vapor is existent in the atmosphere up to a height of approximately 30km, because the storage capacity is decreasing with decreasing temperature. If the altitude exceeds 30km, the steam falls out in form of clouds or haze. Near ground the atmosphere contains additionally smoke, dust and soot (not mentioned in the table below).

Table 1: Chemical Components of Air [12]

Component	Chemical Sign	Volume [%]	Mass [%]
Nitrogen	N_2	78,101	75,5
Oxygen	O_2	20,946	23,1
Argon	Ar	0,932	1,285
Carbon Dioxide	CO_2	0,031*	0,05*

Neon	Ne	$1,82 * 10^{-3}$	$1,3 * 10^{-3}$
Helium	He	$5,2 * 10^{-4}$	$7,2 * 10^{-5}$
Krypton	Kr	$1,0 * 10^{-4}$	$2,9 * 10^{-4}$
Hydrogen	H_2	$5,0 * 10^{-5}$	$3,5 * 10^{-6}$
Xenon	Xe	$8,0 * 10^{-6}$	$3,6 * 10^{-5}$
Ozone	O_3	$2,0 * 10^{-6}$ *	$3,3 * 10^{-6}$ *
Water Vapor	H_2O	1,62	1,02
Radon Isotopes		$6,0 * 10^{-18}$ *	$4,6 * 10^{-17}$ *

"Remark: The information in [the table, remark by J. Burmester]…is related to air at 20°C and 1013mbar. The content of water vapor is related to 70% relative atmospheric humidity. The part of volume or weight of the elements marked with a star can sway considerably, depending on the time and the place., [12]" [literal translation by J. Burmester]

The different layers of the atmosphere are subdivided [10], [12]:

- Troposphere: average altitude about 11km (above the poles 8km at –50°C, above the Equator 17km at –90°C). In this layer the weather happening takes place].
- Tropopause: border layer between Tropo- and Stratosphere with an average altitude of 11km.
- Stratosphere: 11km up to about 50km height. Up to an altitude of approximately 20km the temperature is constant –56,5°C, thereafter the temperature increases up to 50km until reaching approximately the value of 0°C. In this layer in the altitude of about 27km oxygen with three atoms is found (Ozone layer).
- Stratopause: border layer between Strato- and Mesosphere.
- Mesosphere: 50km up to 80km altitude.
- Mesopause: border layer between Meso- and Thermosphere.
- Thermosphere: 80km up to 500km altitude.
- Ionosphere: 500km up to 1000-2000km altitude.
- Exosphere: 1000-2000km changing into the outer space.

The mass of an air column on a predefined ground area is called air pressure depending on height of the column. The air pressure decreases with increasing altitude, because air is compressible, [8]. This variation is not linear. Respectively the oxygen partial pressure decreases, because there are less oxygen molecules per volume.

Figure 1: U.S. Standard Atmosphere 1962 [8]

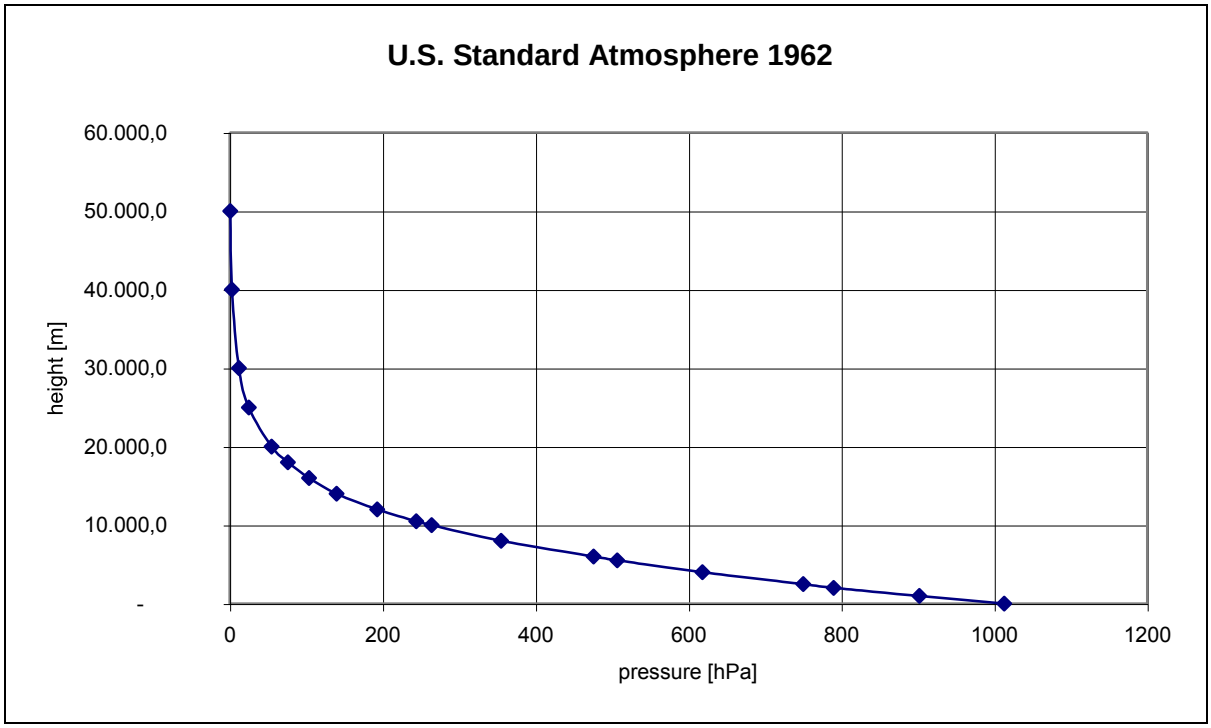

The human breathing is divided in three main parts [8], [10], [12]:

outer breathing: Air is inhaled into the lungs through the nose. On the way it is filtered by the glimmer hair, preheated and moistened. Now it is lead in the alveolae where the gas exchange happens. The oxygen diffuses from the alveolar into the capillaries through both cell walls. Now it is bound by the hemoglobin of the red blood corpuscles (Erythrocytes). Simultaneously carbon dioxide is given away the other way round. This diffusion , the penetration of the breathing gases through the cell membranes, is a mere physically process. It is caused of the ruling differences of the partial pressures. After this process the air is breathed out.

transport: The oxygen is transported via blood circulation from the lung to the heart , and from the heart via main artery, artery and smaller vessels to the different body cells. The other way round the carbon dioxide enriched blood is transported via the heart to the lung.

inner breathing (cell breathing): The gas change of the body cells is caused by diffusion again. The oxygen (chemically bound by the hemoglobin) is deposited at the body cells and the brain and used for oxidation. Carbon dioxide diffuses parallel from body cells into the blood to be carried away, it is an important regulator for breathing.

Figure 2: Human Breathing Cycle [10]

CO_2 enriched blood O_2 enriched blood

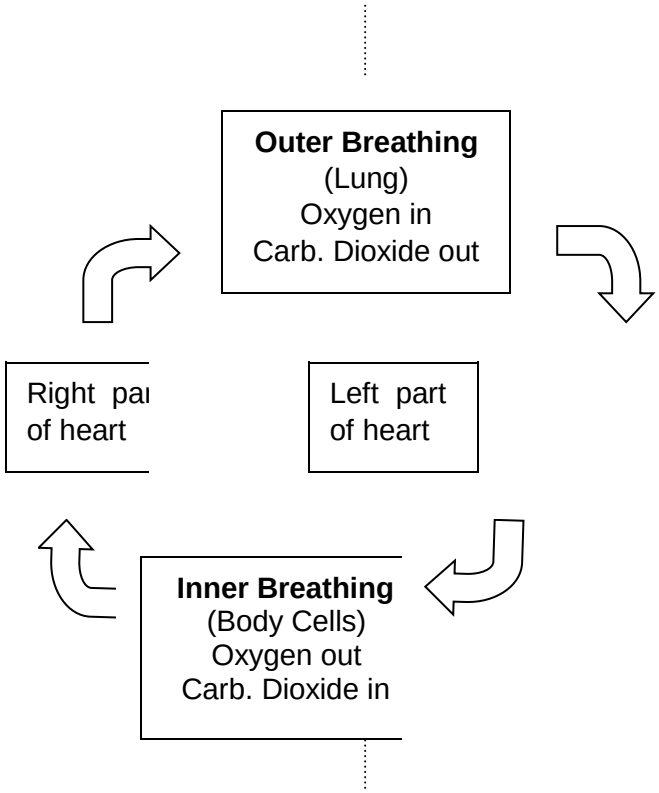

A controlling factor of the gas exchange in the pulmonary alveolus and in the cells is the partial pressure of the several components of the breathing air. The total pressure of a gas mixture is equal to the sum of the partial pressures (Dalton´s law), [8]. The partial pressures are corresponding to the proportional volume parts of the several components. If the total pressure is reduced, the oxygen partial pressure will be decreased in the same way. Additionally the breathing air is saturated with water vapor (37°C) through the breathing organs. The partial pressure amounts to 0,063bar/0,914psi. The vapor avoids drying of the pulmonary alveolus. Considering the constant of whole pressure, the partial pressures of oxygen, nitrogen and carbon dioxide are reduced through moistening of air. At sea level the air possesses an oxygen partial pressure of 212mbar (trachea: 199mbar, pulmonary alveolus: 137mbar). At 10000ft the oxygen partial pressure is essentially lower: 145mbar (trachea: 133mbar, pulmonary alveolus: 80mbar). This is enough for an oxygen blood saturation of 90% which is necessary for the normal function of the human body. The body has no lack of oxygen , [8]. Up to a height of 14000ft the body compensates the lack appearances with several measures: The breathing becomes deeper and more frequent, the pulse frequency increases, [8]. Above 14000ft compensation is incomplete and lack symptoms appear.

Due to this the atmosphere can be divided in several parts [8] [10] [13]

1. sea level – 10000ft: Indifference zone (full performance).
2. 10000ft: reaction threshold.
3. 10000ft – 14000ft: zone of complete compensation (limited performance).
4. 14000ft: disturbance threshold.
5. 14000ft – 20000ft: zone of incomplete compensation (reduced performance).
6. 20000ft: critical threshold.
7. 20000ft – unlimited: deadly zone.

The oxygen lack caused by an insufficient oxygen partial pressure is called Hypoxia. Different types of Hypoxia are mentioned in the literature [12]: Hypoxic Hypoxia, Artery Hypoxia, Capillary Hypoxia, Toxic Hypoxia.

Hypoxic Hypoxia: This type of Hypoxia is characterized by the insufficient oxygen partial pressure. This is caused by the oxygen concentration of breathing air falls short of 21% or the air pressure is insufficient at normal oxygen concentration.

Artery Hypoxia: This type of Hypoxia is characterized by the reduced part of haemoglobin in the human blood (oxygen carrier substance). For this reason the blood is unable to carry the sufficient quantity of oxygen. Anemia (causing of sickness or blood donation), poisoning with carbon monoxide (higher affinity than oxygen, occupies the haemoglobin) or hypothermia (oxygen bonding forces to the haemoglobin higher than diffusion forces, insufficient passing rate to cells).

Capillary Hypoxia: This type of Hypoxia is characterized by the insufficient oxygen supply to cells causing of insufficient blood supply. The disturbed blood supply is resulting of shock, binding of bleeding extremities, effects of G-forces or hyperventilation.

Toxic Hypoxia: Alcohol consumption and smoking is causing this type of Hypoxia. The cells contaminated with alcohol or cyanide are not able to absorb the oxygen enriched blood. Carbon monoxide inhaled with smoke of e.g. cigarettes has a 200-300 times higher affinity to haemoglobin compared with oxygen. The oxygen saturation in the blood of smokers has the same value as normal blood at 5000ft.

The Hypoxia brings about lack symptoms depending on altitude and state of health which are tabled below.

Table 2: Typical Symptoms of Oxygen Lack in Different Altitudes [10]

Oxygen Saturation (arterial) [%]	Oxygen Part.Press. (alv.) [mbar]	Altitude [Ft]	Altitude [m]	Appearance after	Symptoms
95	105	5000	1520	unlimited	Affection of Eyesight (Night)
90	80	10000	3050	4h	Tiredness, Indolence
80	59	15000	4550	>2h	Headache, Sleepiness
70	51	18000	5500	>0,5h	Brain Disturbance, Affection of Eyesight, Euphoria

65	44	20000	6100	0,25h	Loss of memory, Loss of Time Conception/Faculty of Judgement, Excitement
58	40	22000	6700	9-12min.	Convulsions, Unconsciousness
	24	26000	7900	4-6min.	Unconsciousness, death
		30000	9150	1-2min.	Unconsciousness, death
		38000	11600	30sec.	Unconsciousness, death
		50000	15200	10-12sec.	Unconsciousness, death

In the case of decompression at high altitude the time of useful action or rather consciousness (time of useful consciousness=TUC) describes the span of time in which the pilots can seize life rescuing measures, before unconsciousness happens.* After TUC there is no ability to act, so rescue can be done only by strangers. In the table above the given numbers show that TUC depends on the altitude. The higher the A/C is flying the shorter is the TUC. In altitudes where normal commercial A/C´s fly – above 41000ft – the TUC is too short to cover an emergency descent, the flight crew and pax would become unconsciousness, [12], [4]. Tests with a Boeing 727 have shown that the critical threshold is passed for two minutes at an emergency descent from the altitude of 40000ft with a maximum rate of 5000ft/min, [4]. These findings cause the building and operation regulations which prescribe oxygen systems for A/C´s with pressurized cabins. The oxygen partial pressure has to be raised artificially via addition of oxygen or the environmental pressure of the breathing person has to be increased at nearly sea level to avoid oxygen lack. For the oxygen equipment rules and regulations listed in the following part have been kept.

* It is important to note that, to prevent unconsciousness, oxygen must be breathed before approximately 60% - 70% of the TUC has expired, otherwise unconsciousness will still result.

2.3 Certification Requirements, Rules and Regulations

Requirements in building regulations and equipment result from discoveries in aviation medicine referring to need of oxygen of human beings who fly in aircrafts which flight height endangers the healthy among ambient conditions.
The requirements regard airplanes equipped with pressure cabins and oxygen systems are mentioned in the following. For the sake of completeness, concerning laws and legal provisions are listed in 6.3 Laws and Legal Provisions.

The quantity of oxygen required for the aircraft to fly, following an emergency decompression, the selected emergency descent profile for that aircraft, has to be calculated and provided, to get a license for the A/C.

An example of a typical emergency descent profile is shown in Figure 3 below. The oxygen is subdivided, it is distinguished between Emergency Oxygen, Sustenance Oxygen and First Aid Oxygen [4] [10].

Figure 3: Oxygen Requirements-Altitude-Descent Time [4]

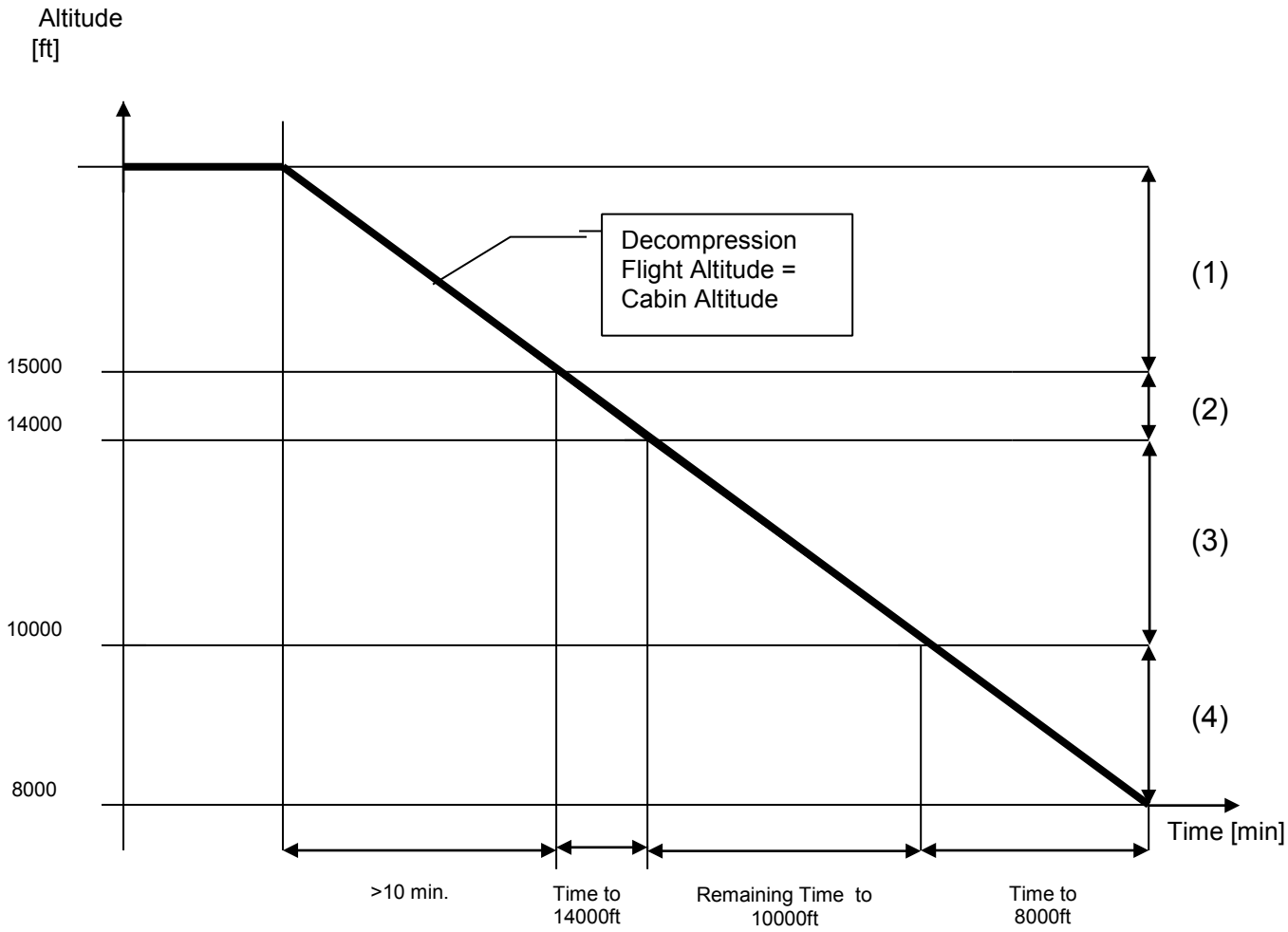

(1) Emergency Oxygen for 100% Pax (FAR 121.329 (b2), (c3))
(2) Sustenance Oxygen for 30% Pax (FAR 121.329 (c3))
(3) Sustenance Oxygen for 10% Pax (FAR 121.329 (c1))
(4) First Aid Oxygen for 2% of Pax, at least 1 Pax (FAR 121.329 (c1))

Emergency Oxygen is the oxygen to be available to 100% pax and crew attendants. This supply shall be available to the flight crew for the entire flight duration above a cabin pressure altitude of 12000ft, and to the passengers for the entire flight duration at a cabin pressure altitude above 15000ft, (FAR 121.329 Sections b2 & c3)

Sustenance Oxygen is the oxygen to be available to:
Passengers - 10% pax for the part of the flight where the cabin pressure altitude is between 10000ft and 14000ft in excess of 30 minutes (FAR 121.329 Section c1) and 30% pax for the part of the flight while the cabin pressure altitude is between 14000ft and 15000ft (FAR 121.329 Section c3).

Crewmembers – All crewmembers for the part of the flight where the cabin pressure altitude is between 10000ft and 12000ft, in excess of 30 minutes (JAR 121.329 Section b1), and all crewmembers during the entire flight where the cabin pressure altitude is in excess of 12000ft (JAR 121.329 Section b2).

"First Aid Oxygen is the oxygen provided out of physiological reasons for two percent of pax, at least for one person" [10], [literal translation by J. Burmester]. Additional oxygen has to be stored for protection of the flight crew against smoke and toxic gases (FAR 121.329 (c1).

2.4 Storage of Oxygen

The main facts and data in this section is taken from literature [10] and [12] mentioned in the appendix in further detail.

The required oxygen is available in different conditions: solid (at temperature lower than 219°C at 1013mbar), liquid (temperature range –219°C – 183°C at 1013mbar), gaseous (stored in high or low pressure cylinders) or chemically bound.

Gaseous :
Gaseous oxygen is stored in high or low pressure containers for crew and passenger systems as well as in portable oxygen devices in civil aircrafts. Different architectures and sizes of seamless stretched oxygen bottles are built. In Germany the filling pressure amounts to 150 – 200bar at a bottle volume of 10, 40 or 50 liters. The American bottles have a filling pressure of 127-145bar (1850-2100psi) at a volume of 2,5, 8,5, 15,5 or 25 liters. The bottles are produced following the DOT – regulations (DOT = Department of Transportation).

Table 3: American Types of High Pressure Oxygen Cylinders [10]

DOT-name	3HT	3HT	3HT	3AA
Volume [liters]	25	15,5	8,5	2,5
Gas capacity at 1850psi in liters	3200	2150	1380	310
Gas capacity in cu ft	115	76	49	11

DOT 3AA is the abbreviation for steel, DOT 3HT for light steel and DOT E 8162 (3FC) for Aramid-Fibre (Kevlar) containers (FC = full composite). 3AA bottles are thick-walled, so in aircrafts they are used only for portable oxygen devices because of higher weight. The 3HT bottles are thin-walled. Their use is only permitted if they are build in as fixed containers. The 3FC–or Kevlar bottles-are thin-walled light metal containers wrapped in fibres drenched in synthetic resin to height up the tensile strength. Because of this special construction a weight saving of about 50% is resulting, a paint finish with a special lacquer is necessary (material is hygroscopic). Different test procedures , test and maintenance intervals are existing for all different kind of bottles.
Liquid:
Liquid oxygen is stored in special facilities on military aircrafts. These storage systems are lighter (70%) and smaller (80%) than high pressure containers with comparable performance, [12]. The oxygen is kept under environmental pressure at a temperature of < -183°C. Gaseous oxygen has to let off permanently (otherwise an explosion/ overpressure is possible) because of consecutive evaporation resulting from insufficient isolation. This means a frequent refilling

of the system. The filling process and the maintenance have to be attended according to fixed rules and regulations, [10], [12].

Solid:
Oxygen is solid at a temperature lower than –219°C at 1013mbar. In aircrafts it comprises no benefits compared with liquid storage, so it is not used.

Chemically bound:
Chemically stored oxygen has to be generated before use. There are several methods to bound oxygen in chemical form described in section 2.6 OBOG-Systems.

2.5 Distribution Systems and System Architectures

The main facts and data in this section is taken from literature [4] and [10] mentioned in the appendix in further detail.

The oxygen system is divided into oxygen storage/oxygen generation unit and distribution system.
The oxygen distribution system on board of an A/C is segregated in three subsystems: Crew oxygen system, passenger oxygen system (centralized/ decentralized) and first aid oxygen system for therapeutic measures. Additionally requirements for protection of smoke and toxic gases have to be fulfilled. The system for the crew is mostly separated from the system for the pax (FAR §25.1445 Section (a1)), otherwise there is means for the crew members to separately reserve the minimum supply required by the flight crew on duty (FAR 25.1445 Section (a2)). In the case of a cabin decompression, smoke, carbon dioxide or other harmful gases, if a pilot leaves his station at a flight altitude above level 250 or if simply a flight crew member requests, oxygen has to be supplied. The mostly chosen system for crew facilities is the storage of gaseous oxygen under high pressure distributed at low pressure. Most system configurations are similar, consisting of the following main components: oxygen cylinder, cylinder shut off valve, heat diverter, manometer, pressure reducer, stop installation, breath controller (at the mask or at service board), oxygen masks and indication and supervision control.
The oxygen cylinders are described in chapter 2.4. The cylinder shut off valves are slowly opening valves to avoid heat build-up caused by pressure shoves. They are built of metal (higher leak rates) or synthetic material (lower leak rates, less abrasion resistance) and provided with burst discs which are destroyed if the pressure in the cylinder exceeds 150% of normal.
Thermal compensators are installed where oxygen is dammed up and compression heat is created. They consist of brush-like copper wire elements put in stainless steel tubes with an average length of 125mm.
For the display of filling pressure mechanical manometers (near the cylinders) and electrically controlled monitors (cockpit) are used, e.g. the Bourdon tube. The pressure reducers have the task to lower the pressure of the stored oxygen (with common American cylinders selected for most airplanes: from 1850psi/ 127bar) to the required distribution pressure (mostly 5080psi/ 3-5bar).
Shut off installations are built in for the crew to allow the manual disconnection of the oxygen flow. The installations are manual slow opening shut off valves/ shut off taps or remote controlled magnetic valves. The design of the oxygen masks depends on the used system: continuous flow, demand flow or pressure demand.
Continuous flow equipment:
This Equipment type provides a continuous oxygen flow to the mask. Depending on altitude required oxygen concentration, air from the cabin is mixed with the oxygen, to reduce the demand on the storage. Demand flow equipment:

This Equipment type provides an oxygen flow depending on the breathing cycle. The consumer causes a negative pressure in the mask as he inhales. The system reacts and supplies oxygen (diluter demand: mixture of oxygen/ air possible), and opens the inhalation valve. When the in-breathing is over, the consumer causes a positive pressure by exhaling. The system reacts and stops the supply of oxygen, the outlet valve opens and the inhalation valve closes.

Pressure on demand equipment:

This Equipment type has the same principle as the demand flow equipment. The difference between the systems is the pressure which is significantly higher at a demand system, the breathing process is reversed. The inhalation of air is done by the system via the overpressure, the breathing muscles relax and the lung is pumped with breathing gas. The exhalation is done by the breathing muscles against the overpressure. The higher pressure effect qualifies the system to higher altitudes than 35000ft because of the resulting higher oxygen partial pressure in the lung.

The system is mostly used in military aircraft. The requirements of the delivered oxygen partial pressure depends on the used system (continuous flow: oxygen partial pressure always above 149mmHg [tracheal] or pressure on demand: partial pressure above 122mmHg [tracheal] up to 35000ft altitude and from 35000 to 40000ft 95% oxygen is required, although 100% is nearly always possible) and the cabin pressure altitude.

An exemplary crew system is shown in picture 4: Gaseous crew oxygen system.

The passenger oxygen system is designed as a centralized system storing the required oxygen in high pressure cylinders or decentralized system storing the oxygen chemically bound. Essentially the pax oxygen system consists of: oxygen storage, automatical and/ or manual activation, flow regulation and distribution unit and stowage for the masks.

The function of the oxygen system is similar to the one of the crew. As the cabin pressure altitude exceeds a predefined line (usually 14000ft) the system is activated automatically by aneroid pressure switches. Also there is the possibility of manual activation by the flight crew. For airports in high altitudes above 14000ft modified pressure switches are selected.

Gaseous oxygen system (centralized):

The oxygen is stored in high pressure bottles described in chapter 2.4, the number has to be calculated by means of the quantity of pax.

The cylinders are equipped with slow opening stop valves, manometers and over pressure burst discs (with a overboard discharge monitor/ sensor) [5]. The system is also fitted out with pressure reducers lowering the pressure from 1850psi/ 127bar to 600psi/ 41,4bar (Cylinders: American type) at the flow regulators which are connected to the distribution line. The flow regulators are also controlled by a pressure switch, with the possibility of manual switching from the cockpit [5]. Release of the flow regulators is followed by the opening of the mask boxes, and the deployment of the masks.

The flow regulators have an integrated pressure reducer, so the flow of the oxygen enriched gas has got a constant low pressure at the masks [5]. As the cabin pressure altitude rises, the flow of oxygen rises also regulated by the control unit. The distribution system consists of rigid main tubes with flexible hoses connected to the mask containers.

The system is equipped with over pressure valves opening at pressure higher than a predefined line in the range of 30psi/ 2,1bar [5]. Additionally a bleed air valve is integrated to discharge leakage overboard if the system is not activated.

The mask containers are located over every seat, at the stations of the flight companions ,in the rest rooms and in the galley. The cover opening is controlled by a pressure switch again reacting on differences in the range of 20psi/ 1,4bar [5].

Finally the masks for the pax are pot-like half masks covering nose and mouth of the user. They are connected to the oxygen outlet via a flexible plastic tube. Attached to the bottom of the mask is a re-breather bag which is permanently filled with oxygen [5]. Additionally there is one non-return valve, an exhalation valve and an inlet valve for additional cabin air. The flow

is activated by a little pin which is pulled out the outlet valve when the user puts the mask on. Oxygen systems for pax are almost all continuous flow in the commercial aircrafts [5].

An exemplary system is shown in picture 5: Gaseous passenger oxygen system.

Chemical oxygen system (decentralized):
The decentralized system has an oxygen storage plus distribution system/ masks for each seat unit. There is no central oxygen storage.
At each seat unit an oxygen generator with the required number of masks is provided. The system essentially consists of: chlorate cores, thermal insulations, stainless steel containers, filters, over pressure valves, outlet valves, release pins, percussion caps, flow indicators, flexible supply hoses, outlet manifolds, oxygen masks and containers for the whole equipment [11].
The function principle of the containers is similar to the one described above. After activation the container opens and the masks fall down to half level. The masks are held by a small lanyard connected to the safety splint. The core is ignited (mechanical or electrical) if the user pulls down the mask completely.
In parallel, the valve to the mask opens. The diameter of the chlorate candle determines the quantity of oxygen delivered per time, the length determines the duration of deliverance. Chlorate candles are delivered with 15min., 22min. and 45min. burn time.
An over pressure valve limits the inside pressure to 75psi/ 5,2bar, an outlet filter cleans the oxygen of particles. Masks and hoses are almost similar to the ones in the system described above [11].

Oxygen for first aid and smoke protection:
Portable oxygen devices are kept in the cockpit and in or near the stations of the flight companions. The number has to be calculated depending on the number of pax and the regulations. The equipment is used for: oxygen content raise in the cabin air, oxygen supply of the flight companions in the cabin, supply of oxygen for additional crew members, first aid, therapeutic measures, fire fighting (protection against smoke and harmful gases) and replacement of the crew oxygen system [4].
The portable oxygen equipment essentially consists of: oxygen storage devices (chemical or gaseous), different kinds of breathing masks, slowly opening stop valves, manometers, pressure regulators, pressure burst discs, refill ports, constant flow valves to connect continuous flow masks with different flow rates and breathing regulators with demand system and connecting ports for such masks [4].
The system is equipped with a strap to ensure the portability. Different masks (full face and half face) are added [4].

Figure 4: Gaseous Crew Oxygen System

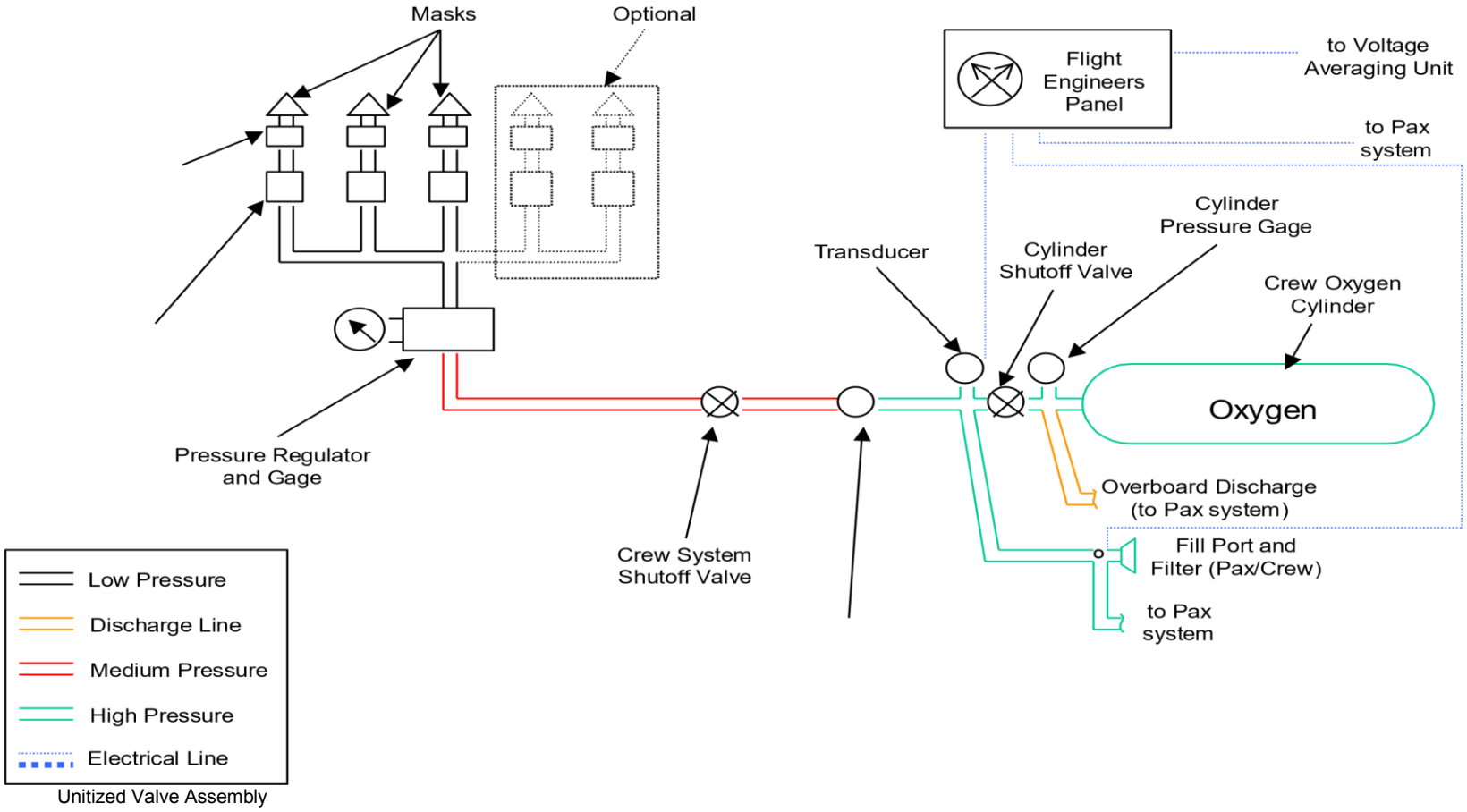

Diluter Demand

Regulator

Pressure
Reducer

Figure 5: Gaseous Passenger Oxygen System

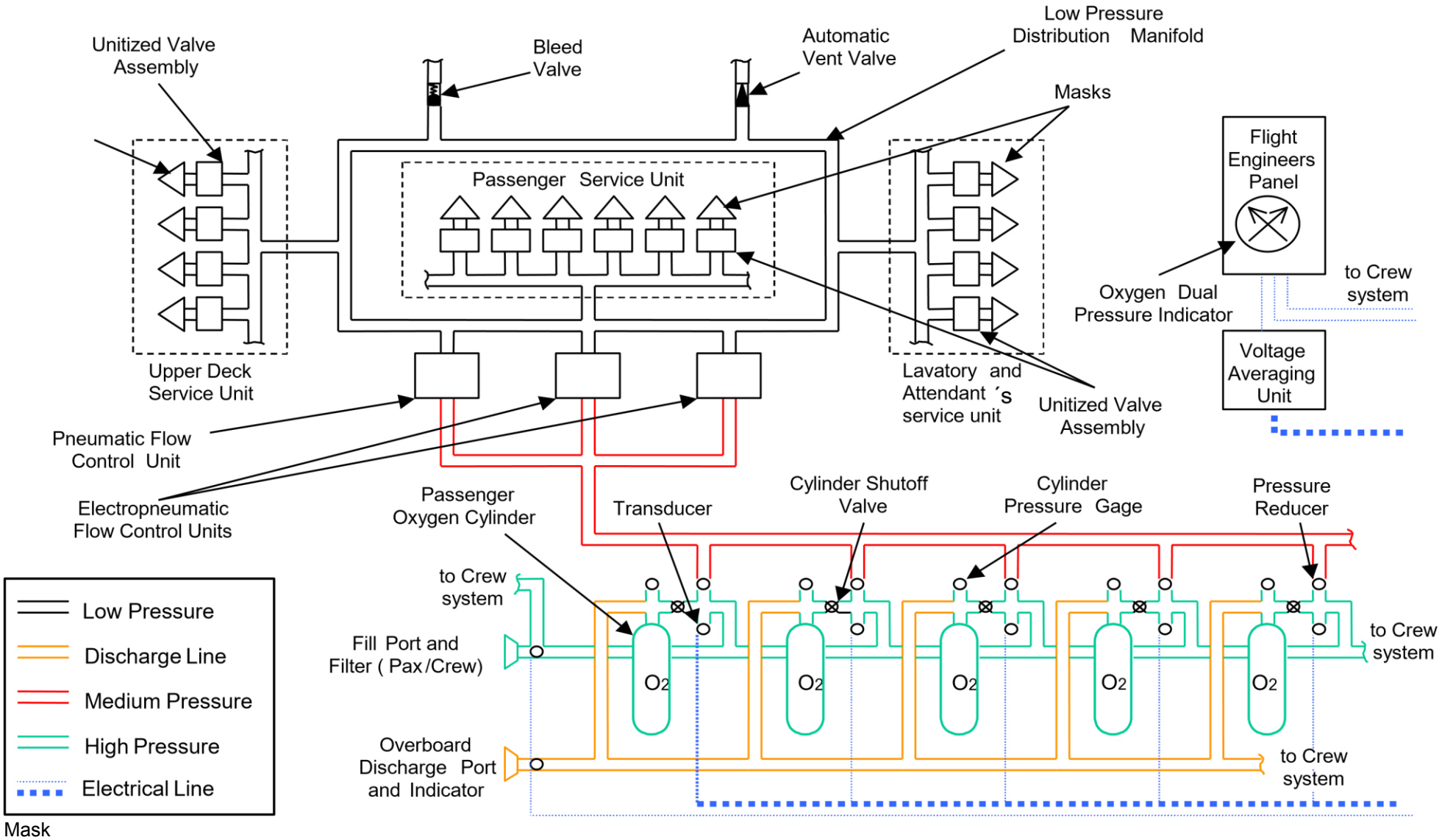
Unitized Valve Assembly
Bleed Valve
Automatic Vent Valve
Low Pressure Distribution Manifold
Masks
Passenger Service Unit
Flight Engineers Panel
Oxygen Dual Pressure Indicator
to Crew system
Voltage Averaging Unit
Upper Deck Service Unit
Lavatory and Attendant´s service unit
Unitized Valve Assembly
Pneumatic Flow Control Unit
Electropneumatic Flow Control Units
Passenger Oxygen Cylinder
Transducer
Cylinder Shutoff Valve
Cylinder Pressure Gage
Pressure Reducer
to Crew system
Fill Port and Filter (Pax/Crew)
O2
O2
O2
O2
O2
to Crew system
Overboard Discharge Port and Indicator
to Crew system
Low Pressure
Discharge Line
Medium Pressure
High Pressure
Electrical Line
Mask

The OBOG System should fulfill different requirements. In consequence of the existing systems three architecture are possible [2]:

On-Top system:
An On-Top system is built in additional to the gaseous oxygen storage system. An On-Top system refills the oxygen storage cylinders during the flight or on ground. When, due to oxygen use or leakage, the pressure in the system falls below a predefined value, the system starts to refill. An On-Top system is also able to refill the bottles used for first aid. In case of decompression the system is able supply additional oxygen to bridge the main load. A system for both (crew and pax) is possible in the same way as one system for crew and one for the pax. The system has to provide oxygen in high purity/ low flow rates. The main advantage of this architecture: minimizing the service costs for refilling the high pressure cylinders.
On-Line system:
An On-Line system replaces the current system. It is used for direct supply for the crew and the passengers with oxygen when required. There is no storage except a small buffer (e.g. one high pressure cylinder) to deliver oxygen until the OBOGS starting phase is bridged. The system has to provide enough oxygen in shortest time as required in the worst case. A system for both (crew and pax) is possible in the same way as one system for crew and one for the pax. The system has to provide oxygen in sufficient purity in high flow rates. The main advantage of this architecture: The A/C is able to fulfill the LROPS requirements (quasi-unlimited supply time) in order to save fuel. The maintenance cost are lower (reduced number of refillable high pressure cylinders).
Hybrid system:
An Hybrid system links the features of an On-Line system and an On-Top system. It is sized for high flow rates and provides a small oxygen storage in cylinders for the start-up time and for the main load. A system for both (crew and pax) is possible in the same way as one system for crew and one for pax. The system has the task to refill the small storage with oxygen in high purity if the bottle pressure underbids a predefined line. Also oxygen has to be provided in sufficient purity and high flow rates in case of cabin decompression. The main advantage of this architecture: minimizing the maintenance cost for refilling the high pressure cylinder(s), fulfilling the LROPS requirements (quasi-unlimited supply time) in order to save fuel.

Figure 6: Schematic Description of Possible OBOGS Architectures

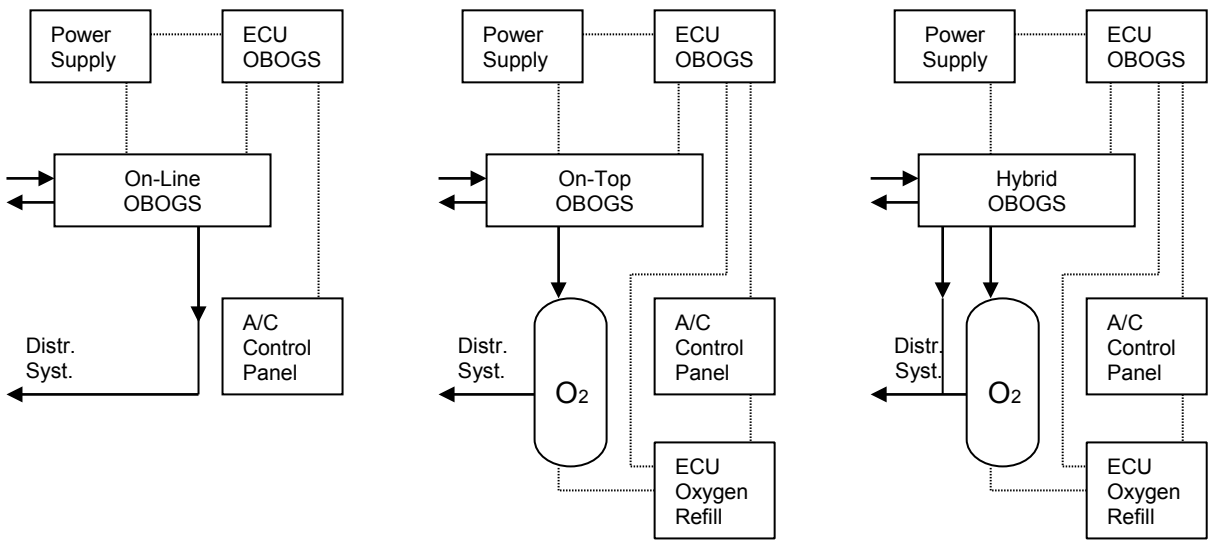

1) On-Line System 2) On-Top System 3) Hybrid System

2.6 OBOG-Systems

The main facts and data in this section is taken from literature [1] and [2] mentioned in the appendix in further detail.

Several possibilities exist to produce oxygen on board of an A/C to increase the oxygen concentration of the breathing air. In the following most of the possibilities are described:

2.6.1 Molecular Sieves

The following data is taken mainly from literature mentioned in the appendix as [1] and [2]. The molecular sieves used for this application are a) synthetically produced crystalline metal aluminosilicates (Zeolithe) made of SiO_4 and AlO_4 or b) Carbon molecular sieves.

a) Sodium and calcium equalize the charging deficit of AlO_4. They have the property to preferentially adsorb nitrogen molecules, as well as other gas such as CO, CO_2, NH_3, hydrocarbons and sulfur compounds with pressurized air as operating supply. The chemical structures determine the size of the pores and cavities, those molecules with a diameter less than the pore diameter are able to enter the adoption site. “The adsorption forces result from dipole or quatropole moments of the molecules to be adsorbed. There is no chemical bonding between adsorbed gas and molecular sieve. The relatively weak bonding of the adsorbed molecules allows for a reversible process, [1]”. “Therefore, if air flows onto Zeolithe molecular sieve beds, the outlet flow is enriched in oxygen, [2]”. At maximum performance a gas with a composition of 95% oxygen and 5% argon (from air with 21% oxygen and 1% argon) is produced. Argon has similar adsorption properties as oxygen resulting from similar molecule size.

b) Carbon molecular sieves have similar kind of pores as Zeolithes, however, the adsorption forces to oxygen, nitrogen and argon are nearly the same. The difference in adsorption speed is used for separation. Because of the conditions, nitrogen passes through the sieves and oxygen is almost gained during desorption.

Normally Zeolithe systems which are commercially used produce the amount of 50ccm product gas from 1000ccm input. It is possible to filter the argon out of the inlet air with the carbon sieves to raise the oxygen content, however, the process is too complicated and not effective to reach economical meaning. The oxygen concentrator consists of two or three beds. One bed is always pressurized (active; N_2 adsorption) while the other bed is expanded to ambient. The pressure in the active bed increases until it exceeds the gas buffers (plenum) pressure and the product gas passes the check valve. In parallel to the adsorption process in the other bed nitrogen is removed by desorption. The bed is depressurized to ambient pressure followed by countercurrent purging with a portion of the oxygen enriched product gas conducted through the orifice. This cycling process switches continuously each few seconds (as experience shows every 5s-12s) driven by a cycle valve, therefore it is called pressure swing adsorption (PSA). The use of three bed instead of two decreases the amount of product gas used for desorption, because the desorption time increases. Additionally the output flow curve is smother than the curve produced by a two bed concentrator:

Figure 7: Output Flow of a Three Bed MSOC

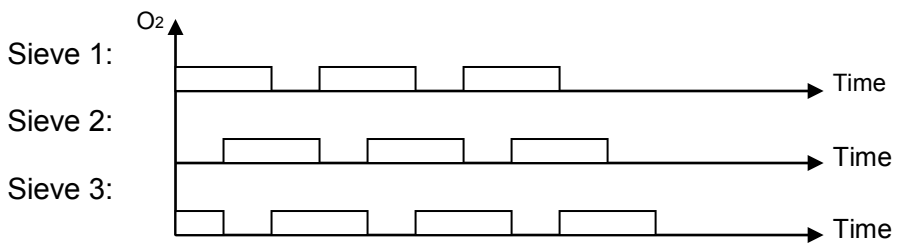

Two beds of the three bed MSOC are always active while one bed regenerates.

There are several factors influencing the concentration of oxygen in the outlet flow:
If the flow per time is decreased, the oxygen concentration will rise. If the supply pressure is increased, the oxygen concentration will rise (1-3bar above ambient pressure). If the absolute pressure at the vent line decreases, the oxygen concentration will rise. If the temperature of process air is increased, the oxygen concentration will drop ("13X Zeolithe has its optimum efficiency at about 20°C and the high purity performance decreases by 50% between 20°C and 55°C. At higher temperature the efficiency is extremely low, [1]."). If the cycle frequency of process air is increased, the oxygen concentration will rise. If the adsorbent mass (concentrator size) is increased, the oxygen concentration will rise. The best results are achieved at a temperature of 20°C and pressures above 20psi. The warm up time (until the system produces the highest oxygen purity) of a MSOC system is fixed between one and three minutes as shown in experiments.

Figure 8: Two Bed Molecular Sieve OBOGS Principle [2]

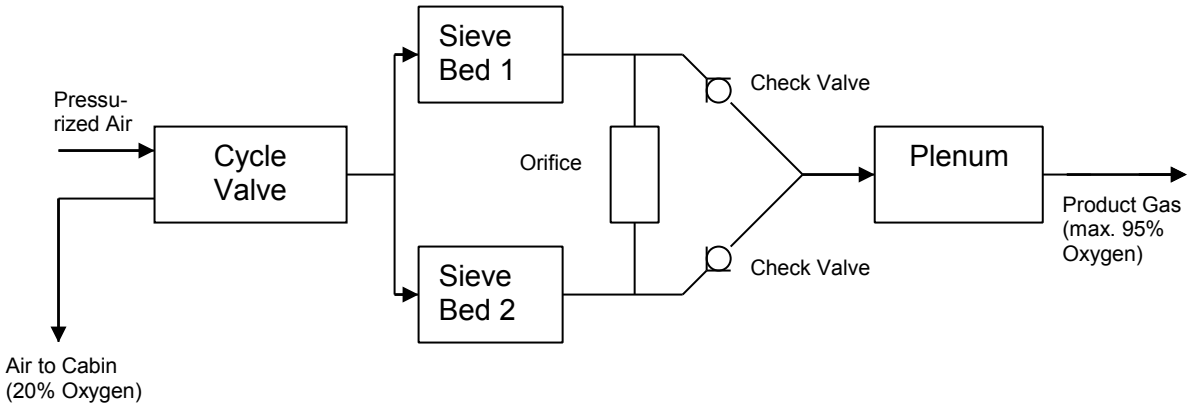

A molecular sieve oxygen generating system contains of the following components and system devices [2]:

- Filter and water separator: For inlet process air (possibly a dryer to increase the efficiency of the system) a water separator and a filter are used to clean the air from unwanted particles and also from water and water vapor.

- Pressure reducer or regulator: If bleed air from the turbines is used as process air, the pressure has to be reduced.

- Air compressor (alternative): If cabin air or air from the outside is used, the pressure has to be increased from ambient pressure to 2-3bar relative.

- Heat exchanger: The exchanger is necessary to cool down the bleed air, the compressed air and/or the compressed oxygen. Mostly these devices function with cabin air (filter, fan).
- Cycle control valve: To control the alternate use of the sieve beds, a cycle control valve is needed.

- Molecular sieve beds: The beds are used to separate the oxygen from the other parts of the air to enrich the product air with oxygen.

- Purge orifice: Between the outlet openings of the beds a purge orifice is placed to allow the partial use of oxygen enriched product gas to flow to the regenerating bed(s); this gas is exhausted to the outside of the airplane or into the cabin.

- Product gas buffer: The product gas buffer is used for reducing the pressure and flow changes due to the switching between the beds. It is not necessary when more than two beds are used.

- Outlet oxygen filter: Needed for safety reasons to insure that the outlet air is clean.

- Oxygen compressor: Depending on the chosen architecture, an oxygen compressor is built in to increase the pressure of the oxygen enriched product gas. If the OBOGS is needed for cylinder refilling, the pressure has to be 130 bar (American bottles in use), otherwise distribution line pressure (5-6bar) has to be reached (conventional lines in use). The compressor has to be compatible with oxygen, oil, grease and other lubricants are not allowed.

- Oxygen concentration sensor: The sensor controls the oxygen concentration of the product gas. The maximum accuracy being available is +/-2%.

- Control unit: An electronic control unit which monitors, equipped with the appropriate sensors, the output oxygen concentration (varying the cycle frequency or the inlet air flow, and venting the product gas which does not satisfy the requirements), the sieve temperature (and shuts down if the system shows symptoms of overheating) and the operating pressure.

- Additionally the system requires the use of different valves.

2.6.2 Electrolysis

The following data is taken mainly from literature mentioned in the appendix as [2] and [14]. Electrolysis is the dismantling (under ionic discharge) of a chemical bonding trough electrical current. This method is based on the electrolysis of liquid water H_2O following the chemical equation:

At the anode: $2H_2O$ ❼ $O_2 + 4H^+ + 4e^-$

At the cathode: $4H^+ + 4e^-$ ❼ $2H_2$

At the one side pure oxygen is generated. At the other side hydrogen is obtained. The method allows the production of nearly pure oxygen (99,9%) at a high pressure (maximum 150bar). Inside a cell assembly a low pressure water supply is used for electrolysis. “The water pours in on the cathode side of the cell and is transported by osmotic forces through an ion exchange membrane (perfluorcarbon membrane or Nafion) which enhances the water transport to the anode where oxygen is produced, [2].” A catalyst is used for process acceleration at the electrodes. “The hydrogen formed at the cathode is separated from the excess (recirculated) water, and diluted with ambient air from…before being discharged from the system, [14].” Also the hydrogen is suitable for use in fuel cells for energy recovery. During the electrolysis process for each liter pure oxygen two liters of hydrogen are produced. The production of oxygen is increased if the flow of process water is increased too. The system is not sensitive to ambient temperature variations if the devices contacting water are well isolated.

The main components of an electrolysis OBOGS are [2]:

- Power supply: A power supply is necessary to energize the anode and cathode with electricity and to power the pumps.
- Water tank: It is not possible to take the water from the surrounding, a water tank is required. It has t be freeze tolerant.

- Heat exchanger: For the inlet water, a heat exchanger has to be provided functioning with cabin air (filter, fan).

- Water pump: A freeze tolerant water pump working under low pressure is needed to convey the process water.

- Deionizer and inlet water/ recirculating water filters: These devices are necessary to prepare the inlet water for the electrolysis.

- Phase separating tube: The tube is used for separating hydrogen from the recirculated excess water.

- Sump: The sump is passed by the returning flow of water and hydrogen, the water is collected by gravity, the hydrogen is exhausted.

- Cell stack: The stack of cells is used for the electrolysis process.

- Oxygen dryer/ filter: Before use of oxygen it has to be secured that the oxygen has the required purity and is situated at a proper dew point.

- Hydrogen recombiner/ diluter: Depending on the use of the produced hydrogen, a recombiner or diluter is needed.

- Electronic control unit: The electronic control unit equipped with adequate sensors which monitors is useful to observe the oxygen generating process. The variables being monitored are: The liquid water supply volume, temperature, purity and flow rate, the oxygen production rate, the outlet oxygen pressure and the hydrogen concentration of the air stream.

- Additionally, the system requires the use of different valves.

Figure 9: Principle of Electrolysis [2]

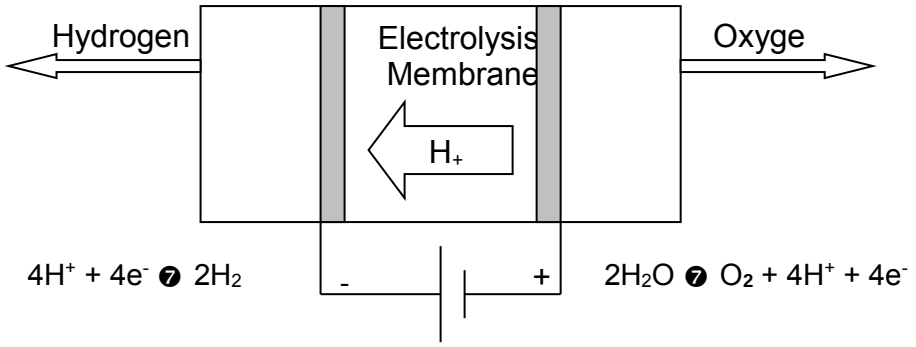

Figure 10: Function Principle of a SPE-electrolysis OBOGS [14]

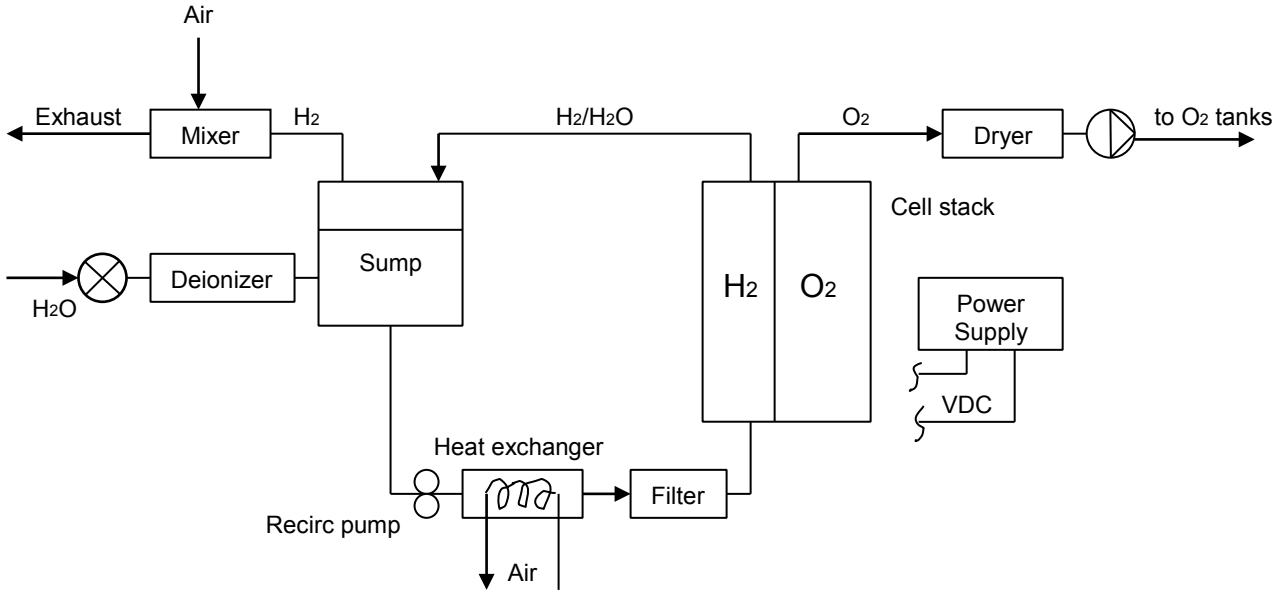

2.6.3 Electrochemical Membrane

The following data is taken mainly from literature mentioned in the appendix as [9].
The electrochemical membrane is made of special ceramic (zircon) material. The membrane has the property to be pervious for oxygen ions when they have high temperatures between 600-800°C.
Gas molecules or other ions have no possibility to wander through. “This is due to the presence of oxygen ions as well as atomic-level vacancies in their lattice structure, [2]”. The production of oxygen from air is made in three steps.
First the molecules of oxygen from air are reduced into oxygen ions on a cathode at the one side of the membrane. Then, by means of the electrical field in the range of 1V which is prepared around, the oxygen ions diffuse through the membrane.
On the other side the ions are oxidized again on the anode to reconstitute the molecules of gaseous oxygen. After process pure oxygen is obtained. In practice at each side electrochemical membranes are covered with porous electrodes. They are built in form of tubes summarized to bundles. A flat plate stack configuration is also developed for flow rates greater than 5LPM Air is flowing inside the tube bundle, and oxygen is released outside it.
The membranes are held at a temperature of 600-800°C (by the heated process air), between the electrodes a small voltage potential is applied. The production of nearly 100% (virtually) pure, pressurized oxygen is made with this method. The start up time of electrochemical membranes depends on heating speed of the process air (experiments show speed of 15min).

Figure 11: Principle of electrochemical membrane [9]

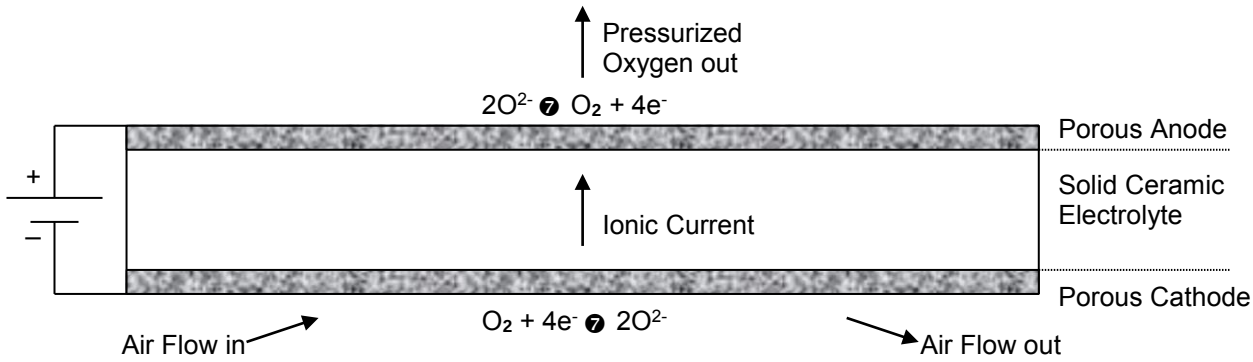

The generation rate of electrochemical membranes depends on the formulation of the ceramic and electrode materials. The rate increases, if:
1) the voltage potential applied to the membrane is increased (proportionality),
2) the ceramic membrane temperature is increased (increase of the ionic conduction). Less important is the partial pressure of the oxygen and the flow rate, so it is not necessary to use bleed or pressurized air, [2].

The main components are [2]:

- A power supply.
- one or two fans for the process and cooling air.
- an input process air filter.
- an oven (with resistance heater and heat insulation), to reach the optimum operating temperature for the inlet air (and tubes).
- a ceramic tube unit.
- a heat exchanger, to cool down the outlet air and oxygen.
- an oxygen output filter.
- an electronic control unit which monitors (with adequate sensors): the oxygen production rate, by varying the voltage applied to the ceramic tubes, (or possibly the generator temperature), the oven temperature, by turning On or Off the heating resistance, the temperature in the exhaust gas, by varying the flow of inlet air used for cooling.

2.6.4 Permeable Membrane

The following data is taken mainly from literature mentioned in the appendix as [2] and [15].
"Permeable membranes–also called hollow fiber membranes-are hollow small diameter polymer fibers which are selected to be more permeable to oxygen and oxygenated compounds (H_2O, CO_2) than to nitrogen, [2]".
With these porous capillaries covered with an oxygen selective partition layer two product gas streams are produced. Nitrogen is received in concentrations up to 99,5% depending on the operation conditions of the permeable membrane.
The concentration of oxygen as a by-product in the second gas stream does not exceed 40% (with an additional vacuum pump concentrations of 50% oxygen are possible), if air is used as process gas. Therefore, if pressurized air is flowing inside the hollow fiber, the oxygen enriched product gas is collected (at reduced pressure) outside the fiber, whereas the process air exits nitrogen enriched at the other end of the hollow fiber.
The more the pressure differential of the membranes wall is raised, the more flow rate and concentration of oxygen enriched product gas is increased (following Fick´s law). Typical pressure differentials have the value of 1-20bar relative.
To provide maximum membrane surface combined with compact installation, the membranes are formed into hollow fiber bundles and enclosed in a tubular pressure vessel.
Another important parameter is the ambient temperature influencing the permeability of the membranes.
Moreover it is possible to use some systems in series or an additional vacuum pump to reach higher oxygen concentrations in the product gas.

Figure 12: Air Separation Module of a Permeable Membrane OBOGS [15]

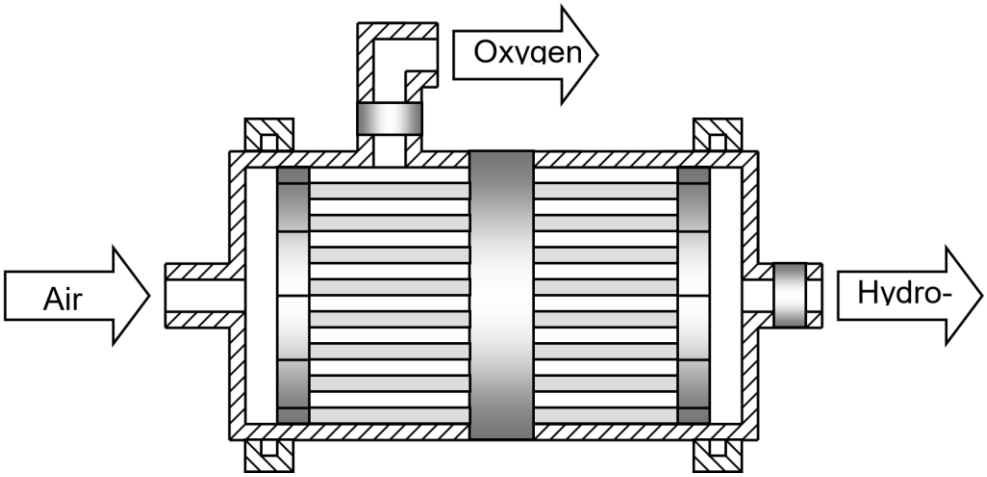

The main components of a permeable membrane OBOGS are [2]:

- A filter for inlet process air.
- An air compressor , if an elevated working pressure is chosen.
- A heat exchanger, to cool down the bleed air and/or the compressed air.
- A pressure regulator.
- The membrane modules.
- An electronic control unit equipped with adequate sensors which monitors: the oxygen enriched product gas oxygen concentration; the system pressure; the oxygen flow rate and the system temperature.

2.6.5 Chemical Generation

The following data is taken mainly from literature mentioned in the appendix as [2], [10] and [2].
Besides high pressure storage in bottles chemical storage is the current method of taking oxygen with on flights. The oxygen is bound in sodium chlorate formed as candles or cores and has to be generated before use.
If an activation energy is given like a short electrical impulse or a mechanical tap, an exothermic chemical reaction starts following the equation:

$2\ NaClO_3$ + "Initialisation" → $2\ NaCl + 3O_2$ + Warmth

Iron powder or other fuels are added to produce the necessary heat to achieve highest combustion rates following the equation:
$4\ Fe + 3\ O_2$ ❼ $2\ Fe_2O_3$

A part of the produced oxygen is used for the combustion of the fuel.

The fuel and the chlorate salt are compounded, along with an inert binder (usually glass fiber) and a material to fix undesirable traces of chlorine, to form a chlorate-based candle.
After the reaction which occurs at 700-800°C, the temperature of the candles is relatively high, almost 300-500°C. The produced oxygen has got high concentration (>99,5%) and is deliverable at high pressure. The candles separate 45% of their weight as pure oxygen, 7% are used for the combustion, so 38% of core weight re delivered as pure oxygen.
If the candles are activated, it is impossible to stop the reaction until the candle is burned down completely. The duration of combustion depends on the length of the chlorate cores (average duration of a current system:15min, 22min or 45min), however, the mass flow is related to the diameter of the candle.
The oxygen is odorless and tasteless and is delivered to the user at low pressure at a temperature of 26°C. The system is able to produce oxygen within 10 seconds as shown in experiments.
The main components of a chemical generator OBOGS are [2]:

- a reaction chamber, containing the chlorate candle and thermal insulation,
- an ignition mechanism (usually a spring/hammer system),
- a filter,
- check valves, to the distribution/storage system.

The following generation methods have no serious meaning in case of oxygen generation on board of large commercial aircrafts. For the sake of completeness, the following systems are summarized in short, further information could be taken from literature.

2.6.6 Other Methods

Cryogenic Distillation [2] [6]

Comparable with the Linde process, the air is cleaned first with a adequate particle filter. Then, after drying and compressing, the process air is refrigerated until it becomes liquid at 80K (-193°C).
Now the air is divided in its components via distillation and oxygen is separated at a purity of 99,5%.

SPE Concentrator [2] [6]

Comparable with the electrolysis (solid polymer electrolyte) which is described above, at this method “water molecules migrate through the electrolyte to the anode where they are electrolyzed into oxygen evolving as a pure gas and hydrogen ions returning to the cathode through the electrolyte, [2].”
Instead of water, air is flowing along the cathode side, where oxygen from air is combined with the hydrogen ions (coming from the anode) to form the required water.

Praseodymium-Cerium Oxide System [2] [6]

“In this method, oxygen is obtained from the dissociation of praseodymium-cerium oxides during a pressure-temperature swing process composed of the following phases:
1) Heating and pressurization in 1min to 495°C and 10bar.

2) Oxide dissociation in 0.5min.
3) Cooling and depressurization in 1min. to 440°C and 1bar. 4) Oxidation with process air in 0.5min, [2]".

Barium Oxide System [2] [6]

Oxygen is produced following the equation mentioned below:

$$2BaO_2 \underset{\text{vacuum}}{\overset{\text{pressure}}{\rightleftharpoons}} 2BaO + O_2$$

The reaction occurs at temperatures in the range of 700°C.
"BaO_2 is formed by absorbing oxygen from dry and CO_2 free air at a pressure of 6bar, whereas the release of oxygen is performed at 0.14bar, [2]".

Fluomine System [2] [6]

"Oxygen is obtained from the following reaction:

$$\text{Fluomine-}O_2\text{ complex} \underset{T \square 100°C\ ;\ P \square 0.5\ \text{bar}}{\overset{T \square 25°C\ ;\ P \square 2\ \text{bar}}{\rightleftharpoons}} \text{Fluomine} + O_2$$

The formation of the Fluomine-O_2 complex is obtained by absorbing oxygen from bleed air in one bed, whereas pure oxygen is released in another bed.
After a half-cycle time of about 4min, the roles of the beds are reversed, [2]".

The different generation methods probably usable for commercial aircraft are molecular sieve, electrolysis, electrochemical membrane, permeable membrane and chemical generation. System characteristics are discussed in the following table in order to compare produced oxygen concentration, flow rate, system volume, power consumption, start-up time, safety, reliability, system complexity, price, state of development and maintenance.

Table 4: Comparison of conceivable oxygen generation methods [2]

Method	Advantage	Disadvantage
Molecular Sieve	• Low Power Consumption • Moderate Weight Experience in Existence (Military Aircraft)	• O_2 Concentration <95% Compressor / Bleed Air • Needed High Complexity
Electrolysis	• O_2 Concentration >99,5% • High Pressure Possible Proven Technology	• Potable Water Required • High Power Consumption High Weight • High Complexity
Electrochemical Membrane	• O_2 Concentration >99,5% • High Pressure Possible	• Operating Temperature 700°C • High Power Consumption • High Weight
Permeable Membrane	• Low Complexity • Proven Technology	• O2 Concentration <50% Weight depends on • process gas pressure Compressor/ Bleed Air Needed
Chemical Generation	• Low Complexity • Used Technology Low Cost	• Limited Supply • Fixed Flow Rate Evolution

Due to the LROPS requirements, the chemical generation method is not usable for generating oxygen for long range flights. The supply is limited, for large aircrafts and long supply time the weight would be unacceptable.
Similar problems are shown at the electrolysis method. For long supply time the quantity of potable water would by high. The total system weight would be unacceptable. Additionally the system adds lot of complexity, also the power consumption is high.
Also the electrochemical membrane system shows problems regarding to system mass. The power consumption is high. The process air needs heating up to 600-800°C.
The most feasible generating systems are the permeable membrane and the molecular sieves. The permeable membrane system mass depends on the pressure of the process air supply. The system has low complexity, needs no scheduled maintenance and is proven in industry for oxygen and nitrogen generating.
The low oxygen concentration may cause problems, depending on the assumed holding altitude. The system normally produces oxygen enriched air with 40% O_2, a content of 30-35%

O_2 would be promised. This would limit the holding altitude approximately to 23kft, a refilling function for storage cylinders or a supply for the emergency descent is impossible.
The molecular sieve generation method offers a relatively high oxygen concentration <95% depending on assumed process gas and product gas flow and system weight. The system needs little power and is proven in military aircrafts. The system complexity is high. Additionally the system would need a compressor or bleed air from a pressurized bay.

3. Planning of Design

The section 3.1 “System Requirements” is based mainly on the thoughts of Dr. Bricard, Patrick and Sutton, Marcus referring to [3] Dr. Bricard, Patrick/ Sutton, Marcus, System Requirement Document (SRD) On Board Oxygen Generating System A340-500/-600, Issue 1, Hamburg, June 2000

3.1 System Requirements

The aim of planning is to find all applicable requirements and design objectives which have to be considered for the On Board Oxygen Generating System. With the complete requirement list an objective evaluation of suppliers proposals is possible as well as the development of an own system. The system requirements have to be searched in different fields listed in the following:

- General Requirements
- Functional Requirements (Oxygen Generating, Oxygen Supply, Control/ Indication)
- Performance Requirements (Start up Time, Oxygen Flow/ Purity, Descent Profiles)
- Operational Requirements
- Safety Requirements (Qualitative/ Quantitative)
- Reliability Requirements (Qualitative/ Quantitative)
- Maintainability Requirements (Design, Concept, MTBUR Objectives)
- Interchange Ability Requirements
- Installation and Environmental Requirements (Space/ Operational Envelope, Install.)
- Weight Requirements
- Functional Interface Requirements imposed on the System (Human Interfaces, Gaseous Oxygen System, Bleed Air Supply, Cabin Air, Other Fluids, Electrical Power Supply, Data Bus Connection, System Integration, Noise)

General Requirements:
The OBOGS is a subsystem of the passenger and crew oxygen system. It generates oxygen or oxygen enriched breathing gas to supply the distribution system of crew and passengers. This is achieved with one OBOGS for both system as well as with two independent systems.
The OBOGS has two main tasks:
It has to provide enough oxygen to keep the required minimum tracheal oxygen partial pressure to the occupants in case of a cabin decompression, even if the A/C continues the flight in high altitude for a long time.
It additional has to provide protection to the flight crew from smoke and toxic gases. The OBOGS has to fulfil these tasks in accordance with the regulations, rules and requirements mentioned in chapter 2, paragraph 3 Certification Requirements, Rules and Regulations and in the appendix 6.3.
In case of decompression the first time is bridged with stored oxygen from cylinders, then OBOGS is operative to provide oxygen or oxygen enriched breathing gas for an indefinite time thereafter.

Functional Requirements:

The system has the sub-functions oxygen generating, oxygen supply and control/ indication (Reference to FAR/JAR § 25.1301 (a),(d)).

The OBOGS has to generate oxygen or oxygen enriched breathing gas in required concentration and flow to supply the occupants. The product gas has to be supplied to the distribution system of the crews and/ or the passengers oxygen systems. It has to be activated automatically immediately after decompression or manual by the flight crew.
The possibility for the flight crew to switch manual between the storage cylinders (if necessary) and the OBOGS supply (for crew/ pax) has to be provided. All status data have to be displayed on the ECAM oxygen page.
The crew has to be informed about oxygen delivery, system malfunction or deterioration of system performance. If warning, caution or advisory lights are installed in the cockpit, colour requirements has to be fulfilled (FAR/JAR § 25.1322 (a)-(d)).
If one OBOGS is used for supply of crew and pax, the possibility has to be given to separately reserve the minimum supply required by the flight crew on duty (JAR/FAR § 25.1445 (a2)).

Performance Requirements:
The OBOGS has to supply a flow in compliance with the requirements at the latest three minutes after activation. After the start up time following cabin decompression the OBOGS has to supply a flow with the required characteristics corresponding to the emergency descent profile of the A/C:
The flight level is 410 (it is assumed that cabin pressure do not exceed 40000ft in case of rapid decompression). After decompression the A/C stays one minute at FL 410 (maximum cabin altitude 40000ft) and then descends to a holding altitude between 10000ft and 27000ft with a maximum rate of 5500ft/minute.
In this holding altitude the A/C remains for at least 540 minutes following the LROPS requirements. For smoke and toxic gas protection, the cabin altitude is assumed to be 8000ft. The OBOGS has to be laid out for high oxygen flow, however, to ensure a high flexibility, the system has to be designed to enable an easy change of the generated oxygen quantity. The minimum flow of oxygen or oxygen enriched breathing gas for pax equipped with TSO-C64a approved continuous flow masks provided by the OBOGS has to be as high to ensure following mean oxygen partial pressure in the trachea of the occupants dependent on the cabin altitude acc. to FAR/JAR 25.1443:
Cabin pressure altitude above 10000ft up to and including 18500ft: a mean tracheal oxygen partial pressure of 100mmHg when breathing 15LPM, BTPS, and with a tidal volume of 700cm^3 with a constant time interval between respiration has to be guaranteed. Cabin altitude above 18500ft up to and including 40000ft: a mean tracheal oxygen partial pressure of 83,8mmHg when breathing 30LPM, BTPS, and with a tidal volume of 1100cm^3 with a constant time interval between respiration has to be guaranteed. To meet these requirements, the OBOGS has to supply to the passenger oxygen system the minimum flow rate as given in the following table:

Table 5**:** Required Oxygen Flow to the Passenger Oxygen System at Different Altitudes [3]

Cabin Altitude [ft]	Oxygen concentration at the trachea [% by volume]	Supplemental Oxygen Flow per person (*) [LPM] NTPD
10000	21,02	0,01
15000	26,17	0,60
20000	27,70	1,32
25000	35,60	2,04

30000	46,78	2,65
35000	63,33	3,19
40000	88,98	3,73

(*) If the source of supplemental oxygen provides an oxygen concentration of CS% instead of 100%, the indicated supplemental flow rates has to be multiplied by 79/(CS% - 21).

The minimum oxygen flow for the flight crew equipped with TSO C78/89/99 approved demand masks, provided by the OBOGS has to be as high to ensure following mean partial oxygen pressure in the trachea of the occupants dependent on the cabin altitude acc. to FAR/JAR 25.1443:
Cabin pressure altitudes above 10000ft up to and including 35000ft: a mean tracheal oxygen partial pressure of 122mmHg when breathing 20LPM, BTPS has to be guaranteed.
Cabin pressure altitudes above 35000ft up to and including 40000ft: 95% oxygen when breathing 20LPM, BTPS has to be guaranteed.
To meet these requirements, the OBOGS shall supply to the crew oxygen distribution system the minimum flow rate as given in the following table:

Table 6: Required Oxygen Flow per Person to the Crew Oxygen System at Different Altitudes [3]

Cabin Altitude [ft]	Oxygen concentration at the trachea [% by volume]	Supplemental Oxygen Flow per person (*) [LPM] NTPD
10000	25,64	2,55
15000	31,93	2,55
20000	40,33	3,73
25000	51,83	5,03
30000	68,11	4,47
35000	95	3,50
40000	95	2,35

(*) If the source of supplemental oxygen provides an oxygen concentration of CS% instead of 100%, the indicated supplemental flow rates must be multiplied by 79/(CS% - 21).

For smoke and toxic gas protection, the OBOGS has to supply a breathing gas flow of 30LPM, BTPD for at least 15 minutes at 8000ft (Reference to FAR/JAR § 25.1439, § 25.1443). The oxygen purity shall be in compliance with SAE AS8010C, oxygen of Type V or Type VI. In particular, oil is not allowed in the breathing gas (Reference to SAE AS8010C).

Operational Requirements:
The crew operational procedures regarding OBOGS has to be simple. The operational envelope of the system is located in a pressure altitude range from –1000ft to 41000ft and boasts the temperature limits from –54°C to 55°C at –1000ft and from –74°C to –32°C at 41000ft.

Safety Requirements:

Qualitative Requirements:
The OBOGS has to be free from hazards in itself, in its method of operation, and in its effect upon other components. The effect on safe flight and landing in case of failure has to be improbable (between 10^{-5} per FH and10^{-9} per FH). The occurrence of failure which reduce the capability of the A/C or affect the crew has to be improbable (between 10^{-5} per FH and10^{-9} per FH). The OBOGS design has to be in simple manner to minimize the potential of human errors. Compliance with these requirements has to be shown by analysis, and where necessary, by appropriate ground, flight, or simulator tests (Reference to FAR/JAR § 25.1309 and § 25.1441 (b)).
Quantitative Requirements:
The probability that the minimum required flow of breathing gas supplied to the occupants is not available has to be less than $1x10^{-3}$ per FH. The probability that the minimum required oxygen concentration is not available has to be less than $1x10^{-3}$ per FH. The probability that the breathing gas supplied to the occupants is contaminated, i.e., the purity requirements of AS8010C are not fulfilled, has to be less than $1x10^{-3}$ per FH.
Further Requirements:
The OBOGS has to be constructed in the way that no item of mass is able to cause direct injuries to occupants, penetrate fuel tanks or lines or cause fire or explosion hazard by damage to adjacent systems (Reference to FAR/JAR § 25.789, § 25.561 (a),(c) and RTCA DO160D (Section 7)). The material used for the system has to meet the fire protection requirements given in FAR/JAR § 25.853 (a) and § 25.869 (a). The location of the system, equipment and lines has to be chosen in compliance with the fire protection requirements as per FAR/JAR § 25.869 (c) and § 25.1453 (a). Leakage of the system has to be minimized and means of detecting on ground has to be provided (§ 25.863 (a),(b)). The high pressure shut off valves has to provide slow opening and closing to avoid the risk of fire and explosion (Reference to FAR/JAR § 25.853 (a), § 25.863 (a),(b), § 25.869 (a),(c) and § 25.1453 (a). Each source of the system has to be protected against overpressure with adequate devices (e.g. rupture discs). Parts of the OBOGS subjected to high oxygen pressure have to be kept to a minimum and have to be remote from occupied compartments. Where such parts are installed within occupied compartments they have to be adequately protected from accidental damage. Each component of the OBOGS distribution system has to withstand a pressure equivalent to not less than the maximum working pressure acting on that part of the system when multiplied by appropriate proof and ultimate factors (reference ACJ 25.1453). Pressure limiting devices (e.g. relief valves), provided to protect parts of the system from excessive pressure, have to prevent the pressure from exceeding the applicable maximum working pressure multiplied by 1,33 in the event of malfunction of the normal pressure controlling means (e.g. pressure reducing valve). The discharge from each protective device and pressure limiting device has to be vented overboard in such a manner as to preclude blockage by ice or contamination, unless it can be shown that no hazard exists by its discharge within the compartment in which it is installed (Reference to FAR/JAR § 25.1453 (b)). Failures of the OBOGS caused by an uncontained engine rotor failure have no effects like hazardous or catastrophic conditions to the A/C. Critical components of the OBOGS have to be located outside vulnerable areas. If not possible, practical design measures have to minimize the risk of hazardous or catastrophic conditions (e.g. deflection shields) (Reference to FAR/JAR § 25.903 (d1)). The OBOGS has to be protected against damage by windmilling caused by sustained engine imbalance. The electrical bonding and protection against lightning and static electricity systems have to be such as to fulfil JAR § 25.899. Electronic system equipment, controls and wiring have to be designed and installed, so that operation of any electronic unit(s) do not adversely affect the simultaneous operation of any other electronic unit(s) (Reference to FAR/JAR § 25.1431 (c)). A failure of BITE (Built in test equipment) functions whether do not affect the operation of the oxygen system nor its components. The system has to contain the specified markings and placards, and any additional information, instrument markings, and placards required for the safe operation if there are unusual design, operating, or handling characteristics. Each marking and placards has to be displayed in a conspicuous place and has not to be easily erased, disfigured, or obscured (Reference to FAR/JAR § 25.1541 (a),(b)).

Reliability Requirements:

Qualitative Requirements:

The system has to achieve the probability values mentioned above for all relevant failure conditions with a low expenditure of maintenance. A failure of the BITE system has not to affect the operation of the components being monitored. The reliability of the BITE system has to be at least one order of magnitude better than the reliability of the parameter/function being monitored. No single hardware failure or software error has to affect the operational reliability or lead to a complete loss of the OBOGS. Deviations from this requirement can be accepted, after substantiation, if the total failure rate of single failures, which can affect the function, is remote or less.

Quantitative Requirements:

The useful and service life of the OBOGS has to be at least 20 years or 10^{+5} FH whichever occurs first. The mean time between failure (MTBF) has to be 10^{+6} FH.

Maintainability Requirements:

The primary maintenance concept is on condition, i.e., an item of equipment has to be replaced only when its condition or performance, as revealed by in-situ test inspection, usage or alert reports from the OMS, falls below the specified in-service standard. Exceptions from this philosophy, e.g. for reasons of safety, reliability or cost effectiveness, have to be fully justified. System and components malfunctions have to be detected by a BITE (built in test equipment) system, wherever practicable, to reduce preventive maintenance activities.

If periodical checks are necessary, the interval has to meet the A/C maintenance program objectives:

A check – 700 FH and A multiples up to 8 A: Simple system tests and servicing.

C check – 18 months (2500 FH – 10000 FH) and C multiples up to 4 C: System tests and visual inspections.

The OBOGS has to be designed with maximum reparability features and has to allow replacement of all components where such repair is economically justifiable. Scheduled maintenance activities have to be minimised (quantity of tasks, high intervals and simple test procedures), component removal for scheduled maintenance has to be excluded. Unscheduled maintenance and servicing tasks have to be minimised by use of highly reliable components. Special tools has to be avoided for installation, removal and maintenance. Component installation and replacement has to be possible without adjustments, calibration or functional test activities, all components have to be easily accessible. Easily visible labels on all equipment to facilitate maintenance practices have to be provided (Reference to ABD 200.1.4). The MTBUR for electronic item of equipment has not to be less than 0.8 x MTBF, for electrical/mechanical item of equipment it has not to be less than 0.95 x MTBF, for pneumatic item of equipment it has not to be less than 0.7 x MTBF.

Interchangeability Requirements:

All components having the same Supplier's part number have to be directly and completely two way interchangeable with respect to fit, form and function without any need for adjustment.

Installation and Environmental Requirements:

The system and its sub-system installation has to be in compliance with the safety and maintenance requirements. The space envelope available for the OBOGS has to be defined. The sub-systems, equipment and components of the OBOGS have to comply with the environmental requirements and test procedures described in the document ABD 0100.1.2 (part1/chapter 2).

They are summarized in the following table:

Table 7: Summary of Environmental Test Requirements [3]

Environmental Requirement	**Environmental Test Reference Document**
Temperature	RTCA DO160 and ABD0100.1.2
Pressure/altitude	RTCA DO160
Temperature variations	RTCA DO160
Humidity	RTCA DO160
Shocks and crash safety	RTCA DO160
Vibrations	RTCA DO160 and ABD0100.1.2
Waterproofness	RTCA DO160
Fluids susceptibility	RTCA DO160
Sand and dust	RTCA DO160 and ABD0100.1.2
Fungus resistance	RTCA DO160
Salt spray	RTCA DO160
Magnetic effect	RTCA DO160
Icing	RTCA DO160
Flammability/Toxicity/Smoke/gas emission	ABD0031
Hail	ABD0100.1.2
Constant Acceleration	ISO 2669 and ABD0100.1.2
Aircraft Attitude	ABD0100.1.2
Electrical	ABD0100.1.8
Lightning	RTCA DO160 and ABD0100.1.2
Radio frequency susceptibility	RTCA DO160 and ABD0100.1.2
Power supply audio frequency conducted susceptibility	RTCA DO160
Induced signal susceptibility	RTCA DO160
Emission of radio frequency energy	RTCA DO160
Single Event Upset (SEU)	ABD0100.1.2 and ABD0100.1.9

(Reference to ABD 0100.1.2, ABD 0100.1.8, ABD 0100.1.9, ABD 0031, RTCA D0160, ISO 2669)

Weight Requirements:
All efforts have to be taken to minimise the weight of the OBOGS.

Functional Interface Requirements imposed on the System:
Human interfaces have to be designed with respect to easy and unmistakable handling. The temperature of the oxygen or oxygen enriched breathing gas in the mask has not to exceed the ambient temperature of more than +5°C (+9°F) with the shortest mask tube length. The modification of the passenger and crew oxygen systems due to the implementation of the OBOGS has to be kept to a minimum.

The OBOGS product gas has to supply the crew oxygen system with breathing gas at the necessary pressure to interface with crew masks requiring a certain inlet pressure range (6095psig).
The OBOGS has to be compatible with the distribution system of the passenger oxygen system. The pressure/flow characteristics of the distribution system of the passenger oxygen system is such that a flow of 4 LPM is delivered per cabin occupant under a maximum working pressure of 7bar relative. If air is taken from the bleed air system, the OBOGS has to be compatible with the bleed air system characteristics.
The pressure of bleed air ranges from 18 to 45psig, the temperature varies between 90°C and 240°C. At 240°C bleed air is saturated with water vapour. Additionally the bleed air is contaminated with various substances listed below.

Table 8: Maximum Bleed Air Contamination Concentration [3]

Substance	Maximum concentration above ambient level (1) (in ppm by volume)	Maximum concentration above ambient level (1) (in mg/m³)
Carbon Dioxide	300	/
Carbon Monoxide	5	5.7
Hydrogen Fluoride	1	0.8
Nitrogen Oxides (NO_x) (2)	1	1.9
Formaldehyde	0.3	0.4
Acrolein	0.05	0.11
Total organic material / Oil breakdown products(3)	0.4	9.8
Breathable particles (4)	/	0.5

(Concentrations at 298K and 1.013bar, expressed as NO_2 equivalent, expressed as synthetic oil equivalent assuming a molecular weight of 600, all airborne particles which lie in the breathable size range of 2 µm and smaller)

If air is taken from cabin air, the OBOGS has to be compatible with the cabin air characteristics. For the contaminant concentration, values of the table above are applicable.
The cabin air has a pressure range from 2,7 to 14,7psia, temperature varies between –15°C and +55°C (humidity: TBD). If other fluids (e.g. water) are used or produced by the OBOGS, interface compatibility with the affected systems has to be ensured.
The electrical power system provide: 28V DC voltage, 115V AC voltage, 3 phases, 400Hz frequency. The total power consumption of OBOGS has to be minimised. Data bus connections should be according to ARINC 429. If data bus connections to other systems are used (e.g. SDAC, CMC, etc.), compatibility with these systems shall be ensured. For integration of the OBOGS in the A/C, the applicable TDD documents has to be fulfilled.
The temperature increase due to OBOGS heat dissipation or cooling air exhaust has to be sufficiently low to prevent damage to neighbouring structures and systems. In flight the system has not to emit disturbing noise to the flight deck or to the cabin. In operation, the unit has not to exceed a sound power level of 65dB (TBC).

Provisions for future functions:
The system should have provisions for the function of refilling 1850psig 115cuft oxygen cylinders on-board of the A/C with required purity.

The system should have provisions for the function of supplying oxygen for therapeutic/first aid purposes.

Provisions for growth capability:
System equipment and components should be designed and sized to be applicable on the A3XX to enable high communality.
The OBOGS should be designed to supply up to 800 cabin occupants and 5 flight deck occupants with a low effort and expense of change in the system/component architecture. The OBOGS may be applied on other Airbus long range A/C.

Compare to this section 3 “Planning of Design”: Dr. Bricard, Patrick/ Sutton, Marcus, System Requirement Document (SRD) On Board Oxygen Generating System A340-500/-600, Issue 1, Hamburg, June 2000.

3.2 Evaluation of Received Suppliers Proposals

The System requirement document (SRD) containing the requirements listed in chapter 3.1 summarized above was given to four independent suppliers in order to propose technical solutions for a quantity of 300, 500 and 800 passengers. The state of development of on board oxygen generating systems regarding to the data given to EADS is summarized in the following. The suppliers are not mentioned in name, because EADS is bound to keep secret about this. However, the data taken from the proposals is based on real developments.
Regarding to duty of keeping internal secrets, it is impossible to make the reference to the suppliers proposals.

Supplier one:
The supplier proposed a MSOC system for crew and passengers. The supplier ensures that the system fulfills all requirements given in the SRD.
System mass: The mass estimated for the system amounts to 300 pax+4 crew - 259kg, 500 pax + 4 crew – 370kg and 800 pax + 5 crew – 519kg (only the separation modules).
Power consumption: The power consumption estimated for the system is 300 pax+4 crew – 190W, 500 pax + 4 crew – 265W and 800 pax + 5 crew – 365W.
System cost: The development, documentation and qualification estimated for the system amounts to $2250000. The range of system cost amounts to $70000-$135000.
Oxygen Concentration: The oxygen concentration depends on the required flow/ holding altitude: crew always 94% oxygen, passengers 10kft – 94%, 20kft – 90% and 35kft – 80%.
Bleed air supply: The system has to be provided with bleed air: 300 pax+4 crew – 30LPM, 500 pax + 4 crew – 45LPM and 800 pax + 5 crew – 65LPM with an assumed pressure greater than 40psig.
Time for development: The time needed for system development, qualification and testing is estimated as two years.
Other topics: The mean time between failure (MTBF) is 3013fh. The system is ready for generate the offered oxygen concentrations in at least three minutes.

Supplier two:
The supplier proposed a MSOC system for crew and passengers. The supplier ensures that the system fulfills all requirements given in the SRD.
System mass: The mass estimated for the system depends on number of used oxygen concentrators. The number of concentrators is a function of holding altitude, number of passengers, bleed air pressure, required concentration and flow. One concentrator weighs

12kg. Power consumption: The power consumption is a function of the number of concentrators and control units.
System cost: The development, documentation and qualification estimated for the system amounts to $970000. One generator costs $8000, a control unit $5000 and a compressor – as necessary - $5000.
Oxygen Concentration: The delivered oxygen concentration is a function of required flow and pressure.
Bleed air supply: The supply of bleed air is a function of the number of concentrators. The assumed bleed air pressure amounts to 21psig.
Time for development: The time needed for system development, qualification and testing is estimated as two years.
Other topics: The system is ready to generate the offered oxygen concentration in at least three minutes.

Supplier three:
The supplier proposed a MSOC system for crew and passengers. The supplier ensures that the system fulfills all requirements given in the SRD.
System mass: The estimated system mass depends on number of passengers and holding altitude: 300 pax+ 4 crew: 80kg (20kft) – 217kg (40kft), 500 pax + 4 crew: 134kg (20kft) – 359kg (40kft) and 800 pax + 5 crew: 212kg (20kft) – 573kg (40kft).
Power consumption: N/A.
System cost: N/A.
Oxygen Concentration: N/A (as required in SRD)
Bleed air supply: The bleed air consumption is estimated as 300 pax+ 4 crew: 18lbs/min, 500 pax + 4 crew: 29,5lbs/min and 800 pax + 5 crew: 47,1 lbs/min. The assumed bleed air pressure amounts to 30psig.
Time for development: The time needed for system development, qualification and testing is estimated as two years.
Other topics: The system is ready to generate the offered oxygen concentration in at least three minutes.

Supplier four:
The supplier proposed a MSOC system for crew and passengers. Additionally the permeable membrane based system is offered as an alternative for the passenger system. The supplier ensures that the system fulfills all requirements given in the SRD.
System mass: The estimated system mass depends on number of passengers, holding altitude and selected system combination: 1) PSA system for both: 300 pax+ 4 crew: 138,2kg (20kft) – 162,2kg (27kft), 500 pax + 4 crew: 203,2kg (20kft) – 243,2kg (27kft) and 800 pax + 5 crew: 301,2kg (20kft) – 335,2kg (27kft). 2) PSA system for crew, permeable membrane for pax: 300 pax+ 4 crew: 73,2kg (23kft, 6bar abs) – 244,2kg (21kft, 2,5bar abs), 500 pax + 4 crew: 109,2kg (23kft, 6bar abs) – 406,2kg (21kft, 2,5bar abs) and 800 pax + 5 crew: 163,2kg (23kft, 6bar abs) – 577,2kg (21kft, 2,5bar abs).
Power consumption: Both possible systems consume less than 115W.
System cost: The development, documentation and qualification estimated for the 1) PSA based system for both amounts to $1340000. The development, documentation and qualification estimated for the 2) PSA based system for crew and permeable membrane based system for pax amounts to $1500000 The range of system cost for 1) amounts to $88000 (500 pax+4 crew). The range of system cost for 2) amounts to $208000 (500 pax+4 crew).
Oxygen Concentration: The oxygen concentration in the supplied breathing gas is between 30% and 40% for PSA based system (both) depending on holding altitude (as required in SRD), for PSA (crew) and permeable membrane (pax) the oxygen concentration follows the SRD requirements.
Bleed air supply: N/A. The assumed bleed air pressure amounts to 27psig.

Time for development: The time needed for system development, qualification and testing is estimated as two years.
Other topics: The system is ready to generate the offered oxygen concentration in at least three minutes. The permeable membrane system produces nitrogen in high concentration useful for e.g. pressurizing the fuel tanks.

4. Technical Design Proposal

In the following pages the Technical Design Proposal is implemented. The Technical Design Proposal will be part of a Technical Note published by ESF1 in mid of October 2000.

Technical Design Proposal Draft 01

Date 30. 09. 00

Summary:

In case of an A/C decompression, On Board Oxygen Generating Systems (OBOGS) are potential alternatives to current systems to cover the oxygen requirements of crew and passengers.

This technical note describes a system concept for an on board oxygen generation system (OBOGS) to enable the A340-500/600 to satisfy the latest LROPS oxygen requirements in comparison to a current gaseous oxygen system.

The OBOGS data received from suppliers is used to show the pros and cons of such systems, including mass, cost, safety, dimensions and maintenance. This report highlights the feasibility, integration method, and areas requiring further investigation, of an OBOGS.

Abbreviation List

A/C	Aircraft
cm	Centimeters
cuft	Cubic Feet
Deg C	Degrees Centigrade
Ft.	Feet
HP	High Pressure
H/X	Heat Exchanger
k	thousand
Kg	Kilograms
kW	Kilowatt
L	Litre
LROPS	Long Range Operations
M	Million
Min	Minute
mm	Millimeters
MSOC	Molecular Sieve Oxygen Concentrator
NRC	Non-Recurring Cost
NTPD	Normal Temperature and Pressure Dry
OBOGS	On board oxygen generating systems
PSA	Pressure Swing Adsorption
psig	Pounds per square inch (gauge)
RFTI	Request for Technical Information
RPSA	Rapid Pressure Swing Adsorption
SRD	System Requirements Document
W	Watt

Date 30. 09. 00

4.1 Scope

The scope of this document is to explain the differences between current oxygen systems and options available.

Referring to the long range operations program (LROPS) requirements, in case of decompression the supply of breathing gas would require larger quantity of oxygen than is currently available on existing aircraft.

The implementation of alternative systems which generate oxygen on board of aircrafts (OBOGS) could be a solution to fulfil these LROPS requirements.

In the following the general principles of both systems are described in relation to the existing requirements.

A current gaseous oxygen system is compared to an OBOG system referring to the data offered by four independent suppliers to get a rough general view of the state of development. The system data is calculated for varying conditions (e.g. holding time).

4.2 General

4.2.1 General System Description

The oxygen system consists of distribution system and oxygen storage/ generation unit. The oxygen distribution system on board of an A/C is segregated in three subsystems: Crew oxygen system, passenger oxygen system (centralized/ decentralized) and first aid oxygen system for therapeutic measures.

The distribution system is less affected by changing of the oxygen storage/ generation system. It is treated with further details in the last section of this document.

4.2.1.1 Gaseous System

In considered aircrafts the oxygen is stored in high pressure cylinders (115ft³/ 3200psig) for crew and passengers. A schematic of an exemplary gaseous oxygen system for passengers is shown below:

Figure 13: Current Gaseous Oxygen System

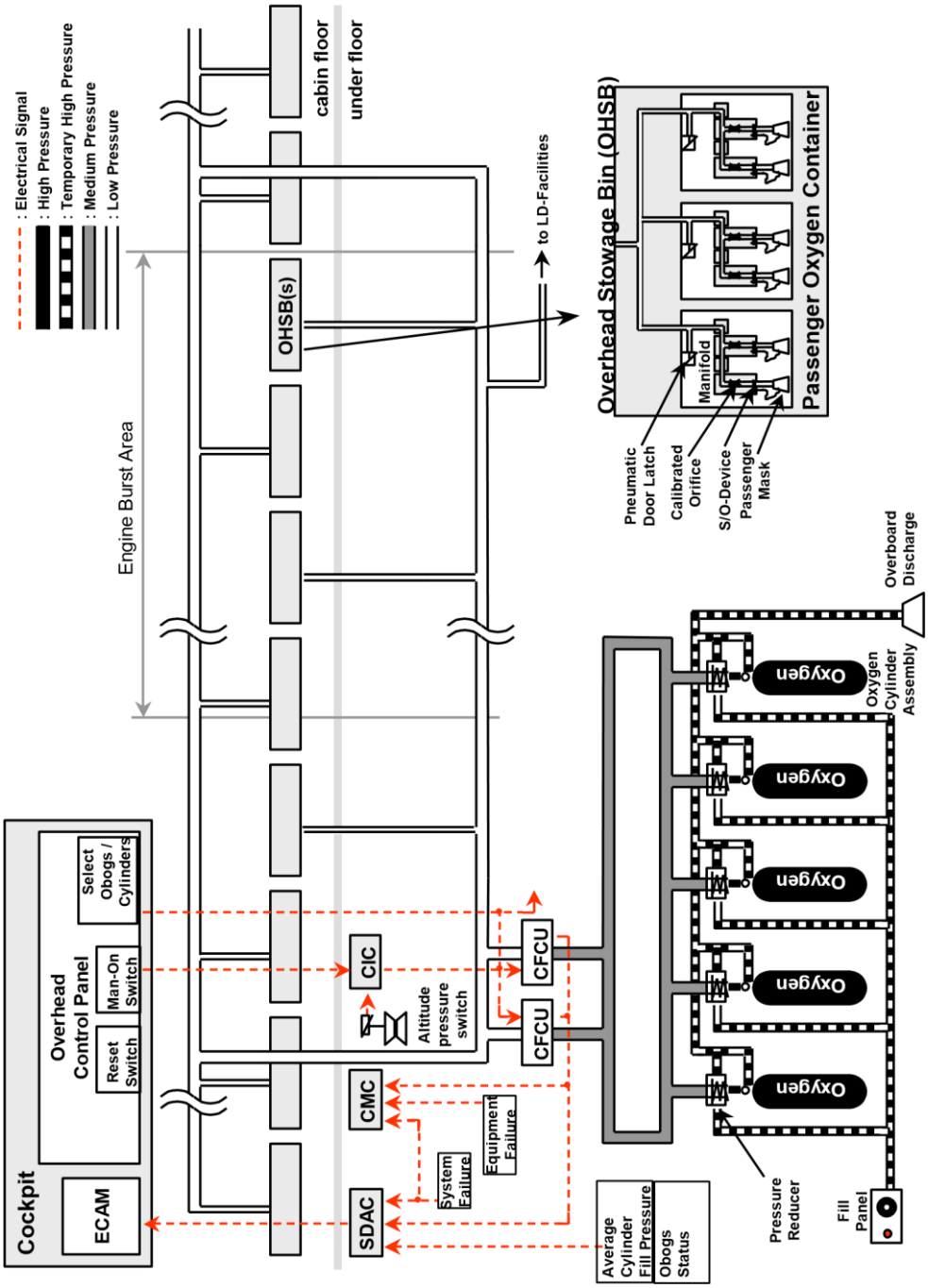

4.2.1.2 OBOG System

The OBOG system generates the oxygen required for the breathing gas in situ on board of the aircraft. Three system concepts are in existence: On-Line, On-Top and Hybrid System concept. The On-Top architecture is not conceivable because of impossibility to fulfil the LROPS requirements with an adequate number of cylinders. The Hybrid architecture is conceivable, however, it adds a lot complexity to refill high pressure cylinders. The refilling function may be a further solution for future developments. The On-Line architecture seems to be the most conceivable solution to fulfil the requirements.

Several oxygen generation methods with different working principles are developed yet. The most probable solution is the rapid pressure swing adsorption (RPSA) using molecular sieves.
Pressurized bleed air from the turbines is used for generating.
The air is filtered and cooled, nitrogen is taken away causing oxygen enriched breathing gas (max. 95%).

The permeable membranes seem also a considerable solution. Pressurized air is taken from the turbines and pressed through bundles of permeable tubes resulting one oxygen enriched (max. 40%) and one nitrogen enriched air stream.

The cabin occupants also need oxygen supply for the time of the emergency descent. This oxygen should be stored in high pressure cylinders or chemically bound as chlorate candle.

A possible integration in the crew and passenger oxygen system is shown in the figure below.

Figure 14: Integration of OBOGS in Crew and Passenger Oxygen System

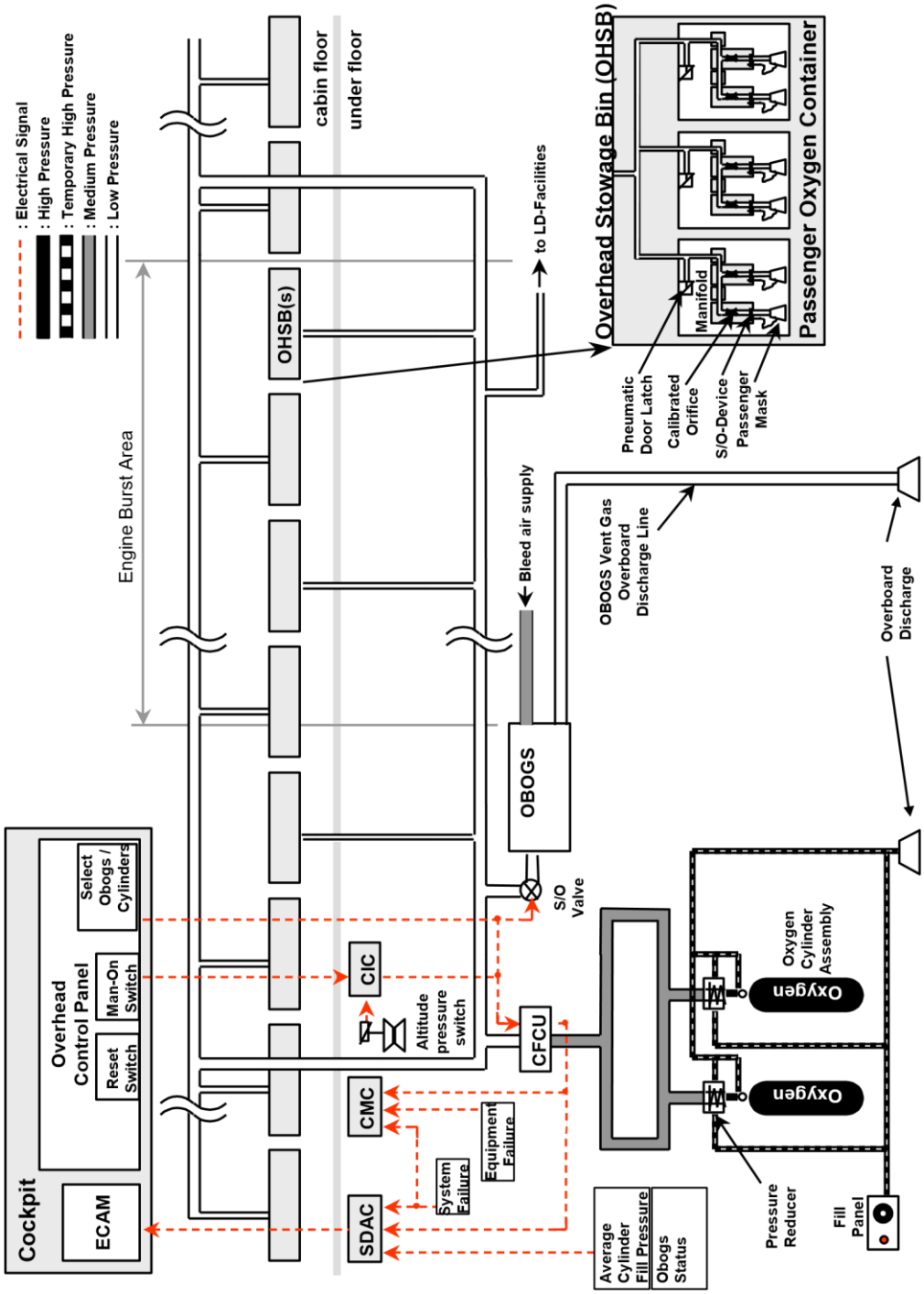

Technical Design Proposal Draft 01

Date 30. 09. 00

4.2.2 General Requirements

The main task of an oxygen system is to provide the minimum tracheal oxygen partial pressure to the occupants in case of a cabin decompression in compliance with the requirements. Additionally the system has to protect the flight crew from smoke and toxic gases.

Detailed system requirements, in particular with regards to flow per occupant, quality of breathing gas and aircraft interfaces etc. are defined in SRD 3500 DF, On Board Oxygen System, A340-500/-600, issue 1.

4.2.2.1 Holding Altitude

As the holding altitude assumed by the aircraft is a major factor in the design of an oxygen system, this technical note assumes that the aircraft will descend, following a cabin decompression, to a holding altitude of 20000ft.

4.2.2.2 Aircraft Configurations

For the purposes of this study, a minimum configuration of 300 passengers, and a maximum configuration of 500 passengers was assumed, as the LROPS program refers to aircrafts for long range operations.

4.2.2.3 Stored Oxygen Supply

The descent from maximum cruise altitude, to holding altitude, will be performed with all crew and passengers breathing stored gaseous oxygen at 100% oxygen concentration.
This stored oxygen supply is not covered in detail within this technical note, as the technology involved is as per the current aircraft installation, although much smaller in size, e.g. 2-3, 115ft^3 oxygen cylinders, are sufficient to cover the demand in this flight phase. A probable solution may be the use of chemically bound oxygen.

4.2.2.4 Breathing Gas at Holding Altitude

Current aircraft installations provide all necessary breathing gas from a stored oxygen supply, to facilitate a descent to a safe air breathing altitude, should a cabin decompression occur.

In order to satisfy the LROPS requirements, the aircraft would have to remain, in order to conserve fuel, at altitude following a cabin decompression, for between 60 and 480

minutes. For a gaseous supply to provide the necessary breathing gas, it would have to be considerably larger in size.

In order to minimize the necessary size and weight of the oxygen system, a request for technical information (RFTI) was given to 4 independent suppliers of on board oxygen generation systems (OBOGS), requesting details on the technology of generating oxygen on board of the aircraft.

4.3 Comparison

4.3.1 System Architecture

4.3.1.1 System Architecture Requirements

The system should be designed to meet the highest LROPS requirements for a 480minute oxygen supply. The system architecture should be as simple as possible. The changes to current distribution systems should be minimized.

In order to supply the passengers breathing gas at 20000ft cabin altitude, it would be necessary to provide, from a stored gaseous oxygen supply, a flow rate of 1.32 l/min/person (NTPD), to existing passenger masks. Additional, the flight deck occupants have to be provided with a flow rate of 3,73 l/min/person (NTPD).

4.3.1.2Gaseous Oxygen System

Should a gaseous system be selected, the basic system architecture would be as per the existing aircraft, although there would be the need for considerably higher numbers of cylinders. For a holding altitude of 20kft the number of cylinders is estimated as:-

Table 9: Number of high pressure cylinders at 20kft holding altitude

Number of cylinders (20kft)		
Pax+Crew	300	500
60 Minutes	9	14

180 Minutes	25	41
330 Minutes	46	75
480 Minutes	**66**	**108**
540 Minutes	74	122

Technical Design Proposal Draft 01
Date 30. 09. 00

Note:- This proposal is intended to describe system configurations designed to meet both the shortest and longest LROPS requirements of 60 and 480 minute oxygen supplies respectively. With a gaseous system, the total system weight and cost is directly related to the required diversion time for the aircraft, i.e. should a customer require only 240 minutes, the figures specified for a 480 minute supply, can be halved.

4.3.1.3 OBOG System

Should an OBOG system be selected, the architecture of the distribution system has to be changed few as mentioned in section 4.4.
The OBOGS would replace the high pressure oxygen cylinders for holding altitude except one or two small cylinders providing 100% oxygen for the emergency descent to holding altitude.
A schematic of the required architecture is shown below.

Figure 15: Schematic of an OBOGS architecture

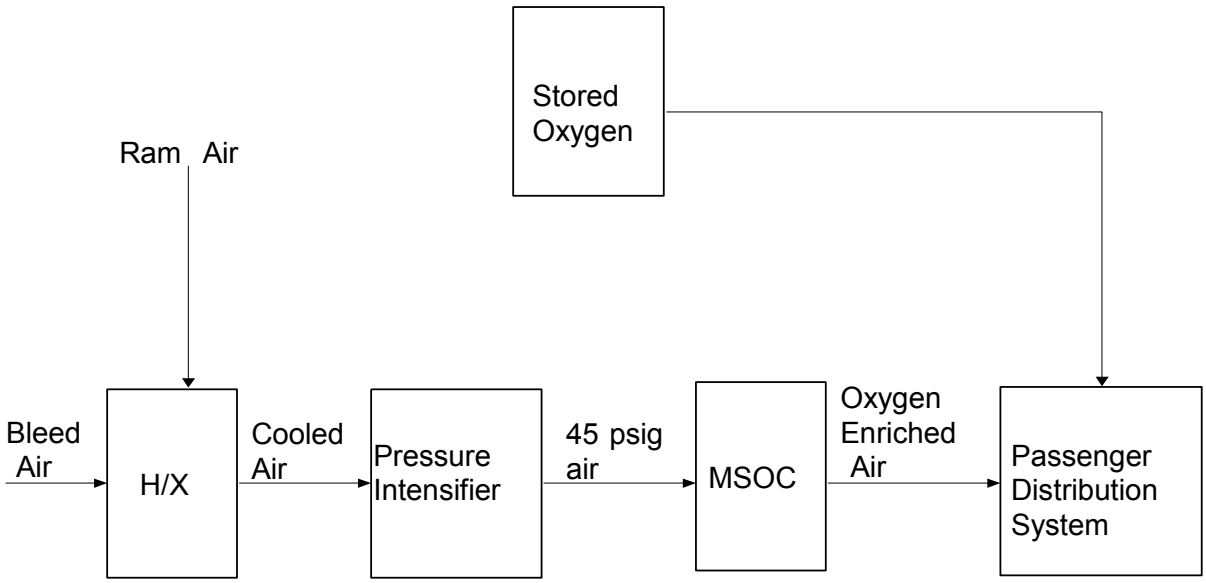

Note:- The requirement for the pressure intensifier, shown above, is dependant on the available bleed air pressure.

4.3.2 Cost

4.3.2.1 Cost Requirements

The cost for the selected system should be minimized. The costs associated with the system can be split into two categories: Non recurring cost (NRC) and recurring Cost.

4.3.2.2 Gaseous Oxygen System

Non Recurring Cost (NRC):
Should a gaseous system be employed, there would be no NRCs, as the equipment would be off the shelf.

Recurring Cost:
As a rough estimate, it is expected that the system cost per cylinder, including all necessary valves, transducers, pipe work etc, would be $3420. Additionally the whole system needs accessories. The estimated cost would be $7460. On this basis, the gaseous system would cost:-

Table 10: Cost of a gaseous oxygen system

Cost [$] (20000ft) Current System		
Crew+Pax	300	500
60 Minutes	38243	55343
180 Minutes	92963	147683
330 Minutes	164783	263963
480 Minutes	**233183**	**376823**
540 Minutes	260543	424703

Note:- The relationship between holding time and system cost is linear.

Additional Costs:
There are no additional costs.

4.3.2.3 OBOG System

Non Recurring Cost (NRC):
The system would need to be designed, developed and qualified specifically for this aircraft program, especially as an MSOC system has never previously been employed on a large commercial aircraft. The range of estimates provided by the suppliers is:-

$1m - $2.25m (US Dollars)

Recurring Cost:
As a rough estimate, it is expected that the system costs provided for 2 aircraft configurations are estimated as:-

300 Passengers - $49k – $72k

500 Passengers - $66k - $112k

Additional Costs:
The cost estimates provided above are based on the required OBOGS only. The aircraft oxygen system will also require a small supply of stored oxygen for use during descents from the maximum flight altitude to the holding altitude whereafter the OBOGS will supply the required breathing gas.

4.3.3 System Mass

4.3.3.1 Mass Requirements

The system mass should be as low as possible. The maximum value should not exceed 200kg following the system requirement document.

4.3.3.2 Gaseous Oxygen System

It is estimated that the mass per cylinder for the system, including all necessary valves, transducers, pipe work etc, would be 20kg. On this basis, the gaseous system would weigh:-

Table 11: Weight of a gaseous oxygen system

Weight [kg] (20000ft) Current System		
Pax+Crew	300	500
60 Minutes	180	280
180 Minutes	500	820
330 Minutes	920	1500
480 Minutes	**1320**	**2160**
540 Minutes	1480	2440

Note:- The relationship between holding time and system mass is linear.

4.3.3.3 OBOG System

The system masses estimated for the OBOG system are in the range of:-

300 Passengers – 80kg – 259kg

500 Passengers – 133kg – 370kg

Note:- This mass estimate includes the separation unit. Additional devices may be necessary for the system, e.g. a heat exchanger, a water separator, a pressure booster. This accessories would increase the system mass. The system masses are not affected by the holding time.

4.3.4 Interfaces

4.3.4.1 Interface Requirements

The modifications of the existing oxygen systems should be kept to a minimum. The system should be compatible to the existing bleed air system. The pressure of the delivered breathing gas should meet the requirements. The temperature of the provided breathing gas should be in a moderate range. The emitted noise should be

also in a moderate range. The system should accept the used data bus connection as well as the current electrical power supply.

4.3.4.2 Gaseous Oxygen System

The gaseous oxygen system is currently in use. It meets the interface requirements. The power consumption is less than 10W.

4.3.4.3 OBOG System

The OBOG system would meet most of the interface requirements. Conditioning of the bleed air would probably cause problems mentioned in the following section. The electrical power consumption for the system will be:-

300 Passengers – 115 – 470 W

500 Passengers - 115 – 725 W

If a bleed air pressure intensifier is required, it is estimated that the mean power requirement of approximately 7.5kW would be required to provide the necessary increase in pressure.

Note:- This consumption is only during a flight condition requiring the use of the oxygen system. Under normal, pressurized conditions, the OBOGS will be switched off, and there will be no power requirements.

4.3.4.4 Bleed Air Supply/ Conditioning

The source gas for the oxygen concentration process is engine bleed air. The following quantities of bleed air are required by the OBOGS:-

300 Passengers – 7,6 – 13,6 kg/min

500 Passengers – 11,6 – 20,4 kg/min

Note:- This demand is only during a flight condition requiring the use of the oxygen system. Under normal, pressurized conditions, the OBOGS will be switched off, and there will be no bleed air demand.

Although engine bleed air can be seen as low as 90Deg C, the nominal temperature will be approximately 240Deg C.

This bleed air will have to be conditioned to approximately 20-55 Deg C., which is a suitable inlet temperature to the oxygen concentrators.

It is expected that this shall be done with the aid of a ram air heat exchanger. There will have to be discussions with aerodynamics to design the ram air interfaces with the fuselage.

4.3.5 Maintenance

4.3.5.1 Maintenance Requirements

The maintenance activities should be reduced to a minimum. Scheduled maintenance should be avoided, a concept on condition is desirable. If periodical checks are necessary, the intervals should meet the A/C maintenance program objectives.

4.3.5.2 Gaseous Oxygen System

Each oxygen cylinder would require hydrostatic testing every 3-5 years, depending on cylinder selection, at a considerable cost to the airline. Also the bank of cylinders would require recharging at regular intervals, to maintain full functionality.

4.3.5.3 OBOG System

An OBOGS system is designed as far as possible to have an ‘on condition’ maintenance philosophy.
That is to say that there is no scheduled maintenance associated with this system.

The exception to this philosophy is the replacement of water coalescent filter elements, which if incorporated within the system, is expected to be once per year.

The maintenance activities associated with the charging of high pressure cylinders would be dramatically reduced as the system would require only 1 or 2 cylinders, and if hermetically sealed cylinders are used, it would be possible to delete the recharging requirement altogether.
The numbers of cylinders requiring hydrostatic testing would also be reduced accordingly.

4.3.6 System Dimensions

4.3.6.1 System Dimension Requirements

The available space envelope should not exceed 1,041m³ wrapped in a space envelope shown below:

Figure 16: Available space envelope

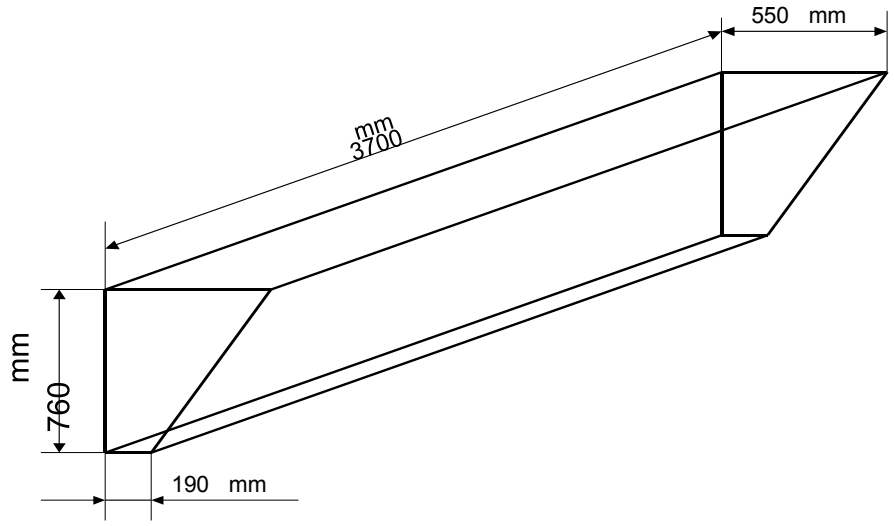

4.3.6.2 Gaseous Oxygen System

The system dimensions of a gaseous oxygen system which is able to supply oxygen to 300 to 500 Pax depends on the cylinders selected. Assuming dimensions of 115cuft cylinders including mounting bracketry and pipe work, the necessary space envelope is estimated as:

Table 12: Space envelope of a gaseous oxygen system

Space envelope [m³] (20kft)

Pax+Crew	300	500
60 Minutes	0,61	0,95
180 Minutes	1,69	2,77
330 Minutes	3,11	5,07
480 Minutes	**4,46**	**7,3**
540 Minutes	5	8,25

Note:- The space envelope necessary for the gaseous oxygen system depends on the number of high pressure cylinders. The number is related to holding altitude and holding time.

Given this maximum available space envelope shown, the holding time would be limited, at 20000ft, to 130minutes (300passenger configuration), and 80 minutes (500 passenger configuration).

4.3.6.3 OBOG System

The maximum permissible system space envelope, shown above, was provided to the suppliers who each confirmed that the system installation could be achieved within these boundaries. The volume of the system may vary depending on holding altitude.

4.3.7 Lead Times

4.3.7.1 Lead Time Requirements

The lead time of the system should be as short as possible.

4.3.7.2 Gaseous Oxygen System

A gaseous system is currently in use and would be off the shelf. All components are tested and qualified. Some calculations may be necessary to resize the cylinder assembly.

4.3.7.3 OBOG System

It is anticipated that an OBOG system can be designed, qualified, manufactured and delivered for installation within 2 years from an order being placed with a supplier.

4.3.8 Nitrogen Purge

The OBOGS will produce, as a bi-product, large quantities of Nitrogen enriched air, which required venting. For the OBOGS to operate optimally, this gas should be vented directly to aircraft ambient pressures.

From our calculations, this would necessitate either one hole in the fuselage of approximately 20cm in diameter, or up to 10 individual outlet of approximately 7.5cm in diameter each. This decision would have to be made in conjunction with aerodynamics.

Alternatively, the purge gas could be vented to an unpressurized bay, as long as the bay has sufficient ventilation to prevent the purge from pressurizing the bay.

4.4 Safety Issues

A detailed safety and reliability analysis has been performed by EAD for this feasibility study and reported in the Memorandum EAD-340/08/00.
Provided that some critical components are made redundant in the OBOGS system, all relevant safety/reliability objectives can be reached.

Moreover, under some assumptions which have to be verified, the safety targets regarding bleed air supply for OBOGS are achievable whether or not the bleed system is involved in the A/C depressurization.
A dispatch with one bleed source inoperable must however be prohibited.

4.5 Major Issues

4.5.1 Oxygen Masks

Currently available crew and passenger oxygen masks are designed to operate with an inlet supply pressure of 60-85psig.
The OBOGS will deliver a considerably lower pressure, approximately 18-40psig.
Either existing mask units will have to be modified to operate at such pressures, or new masks will have to be designed for this purpose.

This subject has been discussed with the mask manufacturers, who are confident of finding a solution.

4.5.2 Regulation Changes

In order to allow an OBOGS system to be incorporated, there will have to be amendments to the oxygen related paragraphs of FAR/JAR part 25 and JAR/OPS.

These changes are necessary to implement this technology on commercial aircraft. Introduction of changes to JAR/OPS has already been initiated via JAA-OSG (oxygen study group) by a joint attempt of AI/EA and ESF1, and initiated via the JAA DNF study group.

4.6 Conclusion of Comparison

It can be seen, as shown in the table below, that an OBOGS system offers considerable benefits over the gaseous system in terms of mass, cost, maintenance.

The use of OBOGS technology provides potential for the supply of adequate breathing gas, for an indefinite period of time to the crew and passengers on board, satisfying the current LROPS philosophy.

Table 13: Comparison of systems

20Kft/480 Min.	**OBOGS**		**Gaseous**	
PAX & Crew	300	500	300	500
System Mass	80kg-259kg	133Kg-370kg	1320kg	2160kg
Cost	$49k-$72k	$66k-$112k	$233k	$377k
Maintenance	Annual Filter	Annual Filter	3 Yearly Hydro. + Regular Re-Filling	3 Yearly Hydro. + Regular Re-Filling
Space Envelope	<1.04m^3	<1.04m^3	4.46m^3	7.3m^3
Power Consump-tion	115W-470W	115W-725W	<10W	<10W

4.7 General Design Drafts

4.7.1 Assumptions

Assuming the planned distribution system of a A340-500/600 for a gaseous oxygen system, it should be feasible to implement the OBOG system instead of oxygen cylinders. Calculations are made for four considerable layouts and different cases.

Case one (#1) assumes a cabin altitude of 40kft, the source concentration of oxygen is nearly 100%.
For case two (#2) a cabin altitude of 35kft and an oxygen concentration of 80% (OBOG System of supplier 1) is considered.
In the third case (case #3) the cabin altitude is assumed as 20kft. The OBOG System produces oxygen with a concentration of 90% (OBOG System of supplier 1).
The last case (case #4) considers a holding altitude of 20kft and an oxygen concentration of 35%. This is in accordance to the proposal of supplier four. Both offered system (permeable membrane and PSA system) are considered.

Technical Design Proposal Draft 01
Date 30. 09. 00

The considered distribution system is planned for A340-500/600 (as representative for a typical distribution system at large commercial aircrafts). A figure of the system (figure 17) is added in the appendix.
The assumptions are summarized in the following two tables.

Table 13: Required Data of Four Design Cases

Case #	Cabin Altitude [kft]	Source Concentration [%]	Required Mask Flow at 100% (1) [LPM NTPD]	"Critical" Mask Flow at 100% (2) [LPM NTPD]	"Critical" Mask Flow at CS% [LPM NTPD]
#1	40	100	3,1	3,48	3,48
#2	35	80	2,657	2,99	4
#3	20	90	1,1	1,24	1,41
#4	20	35	1,1	1,24	6,97

Table 14: Required Data of Four Design Cases

Case #	Cabin Altitude [kft]	Source Concentration [%]	Mean Mask Flow [LPM NTPD] (3)	"Critical" Mask Flow [kg/s]	Mean Mask Flow [kg/s]
#1	40	100	3,73	0,000077	0,000082
#2	35	80	4,28	0,000088	0,000094
#3	20	90	1,51	0,000031	0,000033
#4	20	35	7,46	0,000153	0,000164

(1) TSO C64a (Technical Standard Order)
(2) (1) + 5% orifices production tolerances + 7% pressure regulation tolerances
(3) (2) + 7% pressure drops

The required mask flow (1) at 100% (LPM NTPD) describes the mask flow (100% oxygen concentration in the breathing gas) necessary to provide the required oxygen partial pressure at the trachea. The oxygen mask assembly TSO C64a is an oro-nasal cup-shaped continuous flow type. The “critical” mask flow (2) at 100% (LPM NTPD) describes the mask flow (100% oxygen concentration in the breathing gas) providing the required oxygen partial pressure in the trachea including pressure tolerances by regulation and orifices etc.

The “critical” mask flow at CS% (LPM NTPD) describes the flow of oxygen enriched breathing gas at CS% oxygen concentration to provide the required oxygen partial pressure at the trachea. The mean mask flow characterises the real outcoming flow including 7% pressure drops. Mean mask flow and “critical” mask flow include converted values (LPM NTPD to kg/s).

It is only necessary to examine the worst case of the system. The worst case regarding the oxygen distribution system is the mask with farthest way to the source and most bends and creases in the oxygen riser line causing pressure drops.

4.7.2 Layout of the Planned Distribution System

Figure 18: Exemplary Part of Planned Distribution System Layout

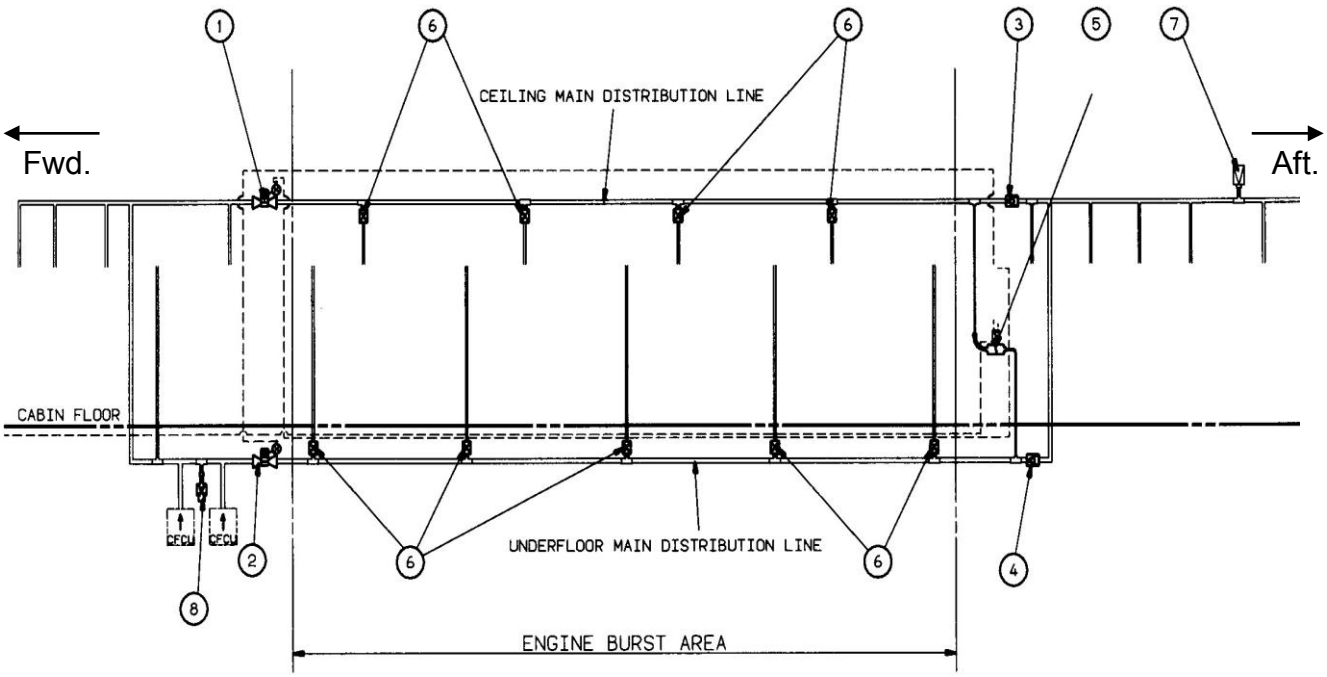

The distribution system contains of: An electrical shutoff valve in the main ceiling distribution line (1) and in the main underfloor distribution line (2) to enable closing in case of engine burst, check valve in the main ceiling distribution line (3) and in the main underfloor distribution line (4) to detect pressure loss causing of engine burst, differential pressure switch (5), riser line shutoff valve (RLSOV) (6), bleed/ vent valve (7) and a test port (distribution network) (8).

Technical Design Proposal Draft 01
Date 30. 09. 00

The pattern of the distribution system used for calculation is added in the appendix as figure 19: Pattern of the distribution system.

4.7.3 Layout of Oxygen Container

The Oxygen Container is connected to the distribution network at the inlet port via a flexible hose. Each container includes two to six masks connected with plastic hoses to the parallel arranged orifices. The diameter of orifices, the sharp/ no sharp bends of the hoses, the diameter of the hoses and the diameter of the manifold influences the pressure loss .

Figure 20: Schematic Layout of Oxygen Container

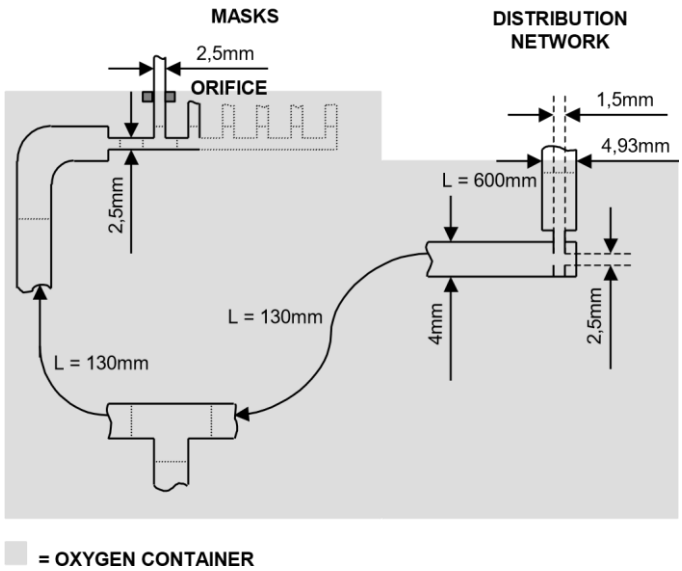

Technical Design Proposal Draft 01
Date 30. 09. 00

4.7.4 Calculated Data

In the first case (100% oxygen, cabin altitude 40kft assumed) the calculations are made with a source pressure value of two or three barg. The distribution network is not changed.

Table 16: Calculation Results Case #1

Pressure Source [barg]	Pressure Source [psig]	ΔP Source-Critical Hatrack [bar]	ΔP Source-Critical Hatrack [psi]	Pressure Hatrack Inlet [barg]	Pressure Hatrack Inlet [psig]	Assumption	Remarks
2	29	2	29	0	0	No Change	Not Fulfilled
3	43,5	0,9	13	2,1	30,4	No Change	O.K.

In the second case (80% oxygen, cabin altitude 35kft assumed, suppliers offer) pressures of 29psig (assumed by supplier) and 18psig (lowest bleed air pressure) are assumed. Changes in diameter of riser line (RL) and diameter of riser line shutoff valve (RLSOV) are tried.

Table 17: Calculation Results Case #2

Pressure Source [barg]	Pressure Source [psig]	ΔP Source-Critical Hatrack [bar]	ΔP Source-Critical Hatrack [psi]	Pressure Hatrack Inlet [barg]	Pressure Hatrack Inlet [psig]	Assumption	Remarks
2	29	2	29	0	0	No Change	Not Fulfilled
2	29	0,9	13	1,1	15,9	1/2" RL, 5/16" RLSOV	O.K.
1,242	18	0,7	10,1	0,5	7,9	1" RL, 1" RLSOV	No Conv.

Technical Design Proposal Draft 01
Date 30. 09. 00

In the third case (90% oxygen, cabin altitude 20kft assumed, suppliers offer) pressures of 29psig (assumed by supplier) and 14,5psig are assumed. The distribution system is not changed.

Table 18: Calculation Results Case #3

Pressure Source [barg]	Pressure Source [psig]	ΔP Source-Critical Hatrack [bar]	ΔP Source-Critical Hatrack [psi]	Pressure Hatrack Inlet [barg]	Pressure Hatrack Inlet [psig]	Assumption	Remarks
2	29	0,16	2,3	1,8	26,7	No Change	O.K.
1	14,5	0,28	4,1	0,7	10,4	No Change	O.K.

In the fourth case (35% oxygen, cabin altitude 20kft assumed, suppliers offer) pressures of 29psig, 58psig and 72,5psig are assumed. The distribution system is changed in every case.

Table 19: Calculation Results Case #4

Pressure Source [barg]	Pressure Source [psig]	ΔP Source-Critical Hatrack [bar]	ΔP Source-Critical Hatrack [psi]	Pressure Hatrack Inlet [barg]	Pressure Hatrack Inlet [psig]	Assumption	Remarks
2	29	2	29	0	0	1/2" RL, 5/16" RLSOV	No Conv.
2	29	2	29	0	0	1" RL, 1" RLSOV	No Conv.
4	58	0,7	10,1	3,3	47,8	1" RL, 1" RLSOV	O.K.
5	72,5	0,9	13	4,1	59,4	1/2" RL, 5/16" RLSOV	O.K.

4.7.5 Function of Flow at the Farthest Mask for Different Configuration

In the following figure the function of flow at the farthest mask of a 6-mask container for different configurations is displayed. The assumed absolute pressure upstream the container is served on the horizontal axis whilst the flow at the farthest mask is put on the vertical axis.

B Flow at the farthest mask (kg/s) - d=0.2mm; sharp bends; 4mm up to a 2.5mm manifold
C Flow at the farthest mask (kg/s) - d=0.6mm; sharp bends; 4mm up to a 2.5mm manifold
D Flow at the farthest mask (kg/s) - d=0.6mm; no sharp bends; 4mm up to a

2.5mm manifold

E Flow at the farthest mask (kg/s) - d=0.6mm; no sharp bends; 5/16" up to a 2.5mm manifold

F Flow at the farthest mask (kg/s) - d=0.6mm; no sharp bends; 5/16" up to a 5mm manifold

G Flow at the farthest mask (kg/s) - d=0.8mm; no sharp bends; 5/16" up to a 5mm manifold

H Flow at the farthest mask (kg/s) - d=1.0mm; no sharp bends; 5/16" up to a 5mm manifold

I Flow at the farthest mask (kg/s) - d=1.2mm; no sharp bends; 5/16" up to a 5mm manifold

Figure 21: Function of Flow at the Farthest Mask for Different Configuration

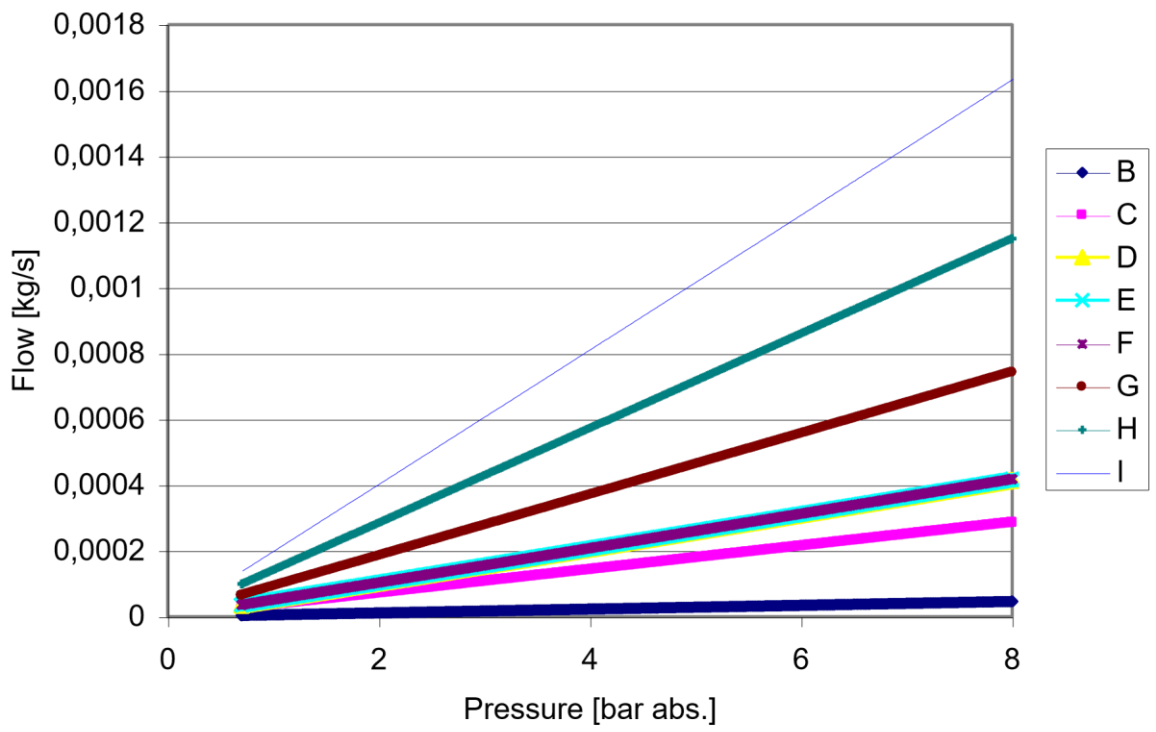

Technical Design Proposal Draft 01
Date 30. 09. 00

4.7.6 Changes and Effects on the System

For the first case, the required flow at the hatracks is reachable for source pressures above 3barg/ 44psig. Assuming lower source pressures, the main distribution line – riser line system (MDL-RL) needs changes in diameter/ another type of electrical shutoff valve (SOV) with better performance. Assuming a source pressure above 3barg, a container with 0,6mm orifice (“standard” container) would be sufficient to provide the required flow.

Considering the second case, the required flow at the hatracks is reachable if the source pressure is at 2barg/ 29psig. The riser line (RL) size has to be ½”, the riser line shutoff valve needs a diameter of 5/16”.
If the distribution system is not impeached, the pressure of 29psig is not sufficient. The pressure of 18psig as the lowest bleed air (OBOGS outlet) pressure is also not sufficient to provide the required flow, even if the distribution system is modified.
Assuming a source pressure of 2barg/ 29psig and the mentioned system modifications, the oxygen container has to be equipped with 0,8mm orifices, no sharp bends and a 5mm manifold.

Assuming the third case ,the system does not need any changes in the main distribution line, riser lines and shut off valves considering a source pressure of 2barg/ 29psig. Also the source pressure of 1barg/ 14,5psig is sufficient to provide the required flow at the hatracks.
With these conditions (1barg source pressure), it is sufficient to use “standard” containers with 0,6mm orifice.

Considering the fourth case, the required flow at the hatracks is reachable if the source pressure is above 4barg/ 58psig. A source pressure of 2barg/ 29psig is not sufficient, even if the riser line and the riser line shut off valve are modified. If the riser line has a diameter of 1” and the riser line shutoff valve has a diameter of 1”, the source pressure of 4barg/ 58psig is sufficient. . If the riser line has a diameter of 1/2” and the riser line shutoff valve has a diameter of 5/16”, the source pressure of 5barg/ 72,5psig is also sufficient to provide the required flow.
Assuming the conditions connected to the pressure of 4barg, an oxygen container with 0,6mm orifice, no sharp bends and 2,5mm manifold would be sufficient to provide the required flow.

4.8 Further Proceedings

Four cases have been simulated on the computer yet. According to suppliers data and the data known from the gaseous oxygen system on a large commercial aircraft, the effect on the masks and the requirements of the distribution system are examined.

In the interests of reducing maintenance activities further, it is assessed the possibility of, within the OBOGS system, replacing the necessary oxygen cylinders with a centralized chemical oxygen generation system. This would delete the requirement for any hydrostatic cylinder testing.
Two principles of integration are shown in section 4.8.5.

4.8.1 Increase of Bleed Air Pressure

As the low bleed air pressures foreseen during some phases of flight are having a significant influence on the system design, it is necessary to look into the possibility of using an alternative pressurized air source to drive the OBOGS.
A study will be performed to identify alternatives, i.e. unconditioned engine bleed air from the HP bleed.

4.8.2 Feasibility of Pressure Intensifier

In order to ensure that the bleed air pressures currently available from the air conditioning system are maintained at an optimum pressure for inlet to the OBOG system, it may be necessary to use an in line pressure intensifier.

A study will be performed to verify the viability of such a pressure intensifier, in terms of mass, cost, reliability and power consumption.

4.8.3 Crew Mask Modification

It is necessary to enter discussions with suppliers of crew quick don oxygen masks, with the aim to establishing how crew masks can be interfaced with the low inlet pressures offered by the OBOGS.

4.8.4 Distribution System Modifications

It is also necessary to calculate and demonstrate the effects on the distribution system and passenger masks of these lower supply pressures, and to identify any necessary modification that result.

It is suggested that, in parallel to computer simulation, a fully representative test rig is commissioned, in order to prove the proposed installation, and demonstrate compatibility with existing equipments.

4.8.5 Replacement of Oxygen Cylinders by Chemical Generators

In the interests of reducing maintenance activities further, the possibility of, within the OBOGS system, replacing the necessary oxygen cylinders with a centralized chemical oxygen generation system is assessed.

This would delete the requirement for any hydrostatic cylinder testing.

Possibilities of integration are shown in the picture below:

Figure 22: Options for Chemical Oxygen Generation for Emergency Descent

Option 1:

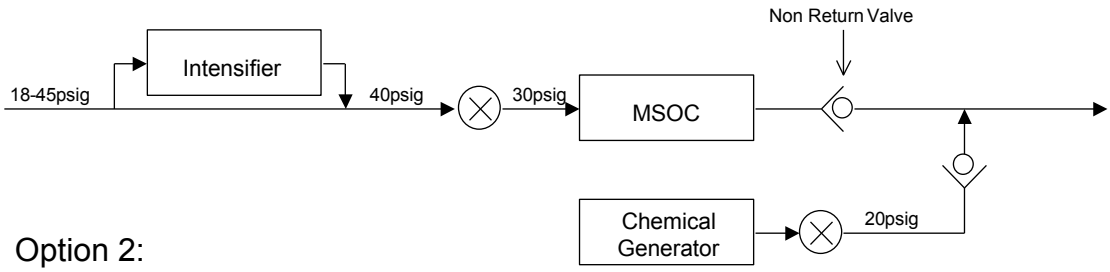

Option 2:

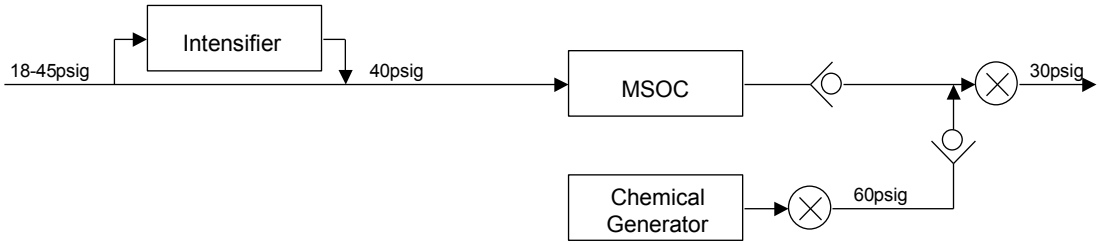

Option 1: Problem: The oxygen from the MSOC needs to be suppressed while the chemical generator works. This could theoretically achieved if the chemical supply pressure is higher than the MSOC pressure.
Unfortunately, if the orifices are sized to pass the correct flow with MSOC gas of e.g. 40% oxygen at 30psig, the chemical supply close to 100%, will need to be at a lower pressure to avoid wastage and the need to oversize the chemical system.

Technical Design Proposal Draft 01
Date 15. 09. 00

Alternatively the inlet pressure reducing valve to the MSOC could include a shut off function to stay closed until the chemical supply has depleted. This would add complexity to the system, because of required additional monitoring of chemical supply.

Option 2: If the MSOC produces 95% oxygen to distribution system, the chemical supply would need to at a similar pressure. This option would provide automatic control of supply selection, and would minimize wastage.

5. Résumé

Concidering the general information relating oxygen generating principles, the proposals of suppliers and the information and data about current distribution systems, it seems to be feasible to implement an OBOG system on a commercial aircraft.
It is probable that the concept of molecular sieves is taken into consideration.

The main intention - fulfilling the LROPS requirements which enables Aircrafts to fly several direct routes (instead of roundabout routes to have always the possibility to divert to emergency airports) – is feasible with the OBOG system. In case of decompression the A/C has also the possibility to continue the flight to destination.
Additionally an advantage is expected in system maintenance. Current gaseous systems need scheduled maintenance (refilling, testing and replacing of high pressure cylinders). The OBOG system would need annually filter change and in situ maintenance if parts are broken. Depending on the system used for storage of emergency descent oxygen, this system part could also need scheduled maintenance.

The main disadvantage of an OBOG system is to add system complexity which has negative effects on reliability.

Neither advantages nor disadvantages are expected for system mass, electrical power consumption, current cost and system dimensions (if OBOGS replaces only the current number of high pressure cylinders).

Problems with implementation are expected in bleed air conditioning. The bleed air necessary for OBOGS has to be cooled down with a heat exchanger. The water vapor and liquid water has to be separated with an adequate water separator. This may affect system mass to achieve necessary separator performance.
Certainly the reliability and safety targets have to be reached, which would also raise the weight of the system because of e.g. necessary redundant components.

Replacement of all high pressure cylinders including the storage for the startup of OBOGS should have kept in mind, e.g. with a large chemical generator. Further thoughts are going this direction to avoid high pressure in A/C.

A schematic figure of the proposed system is shown below.

Figure 23: Technical Design Proposal

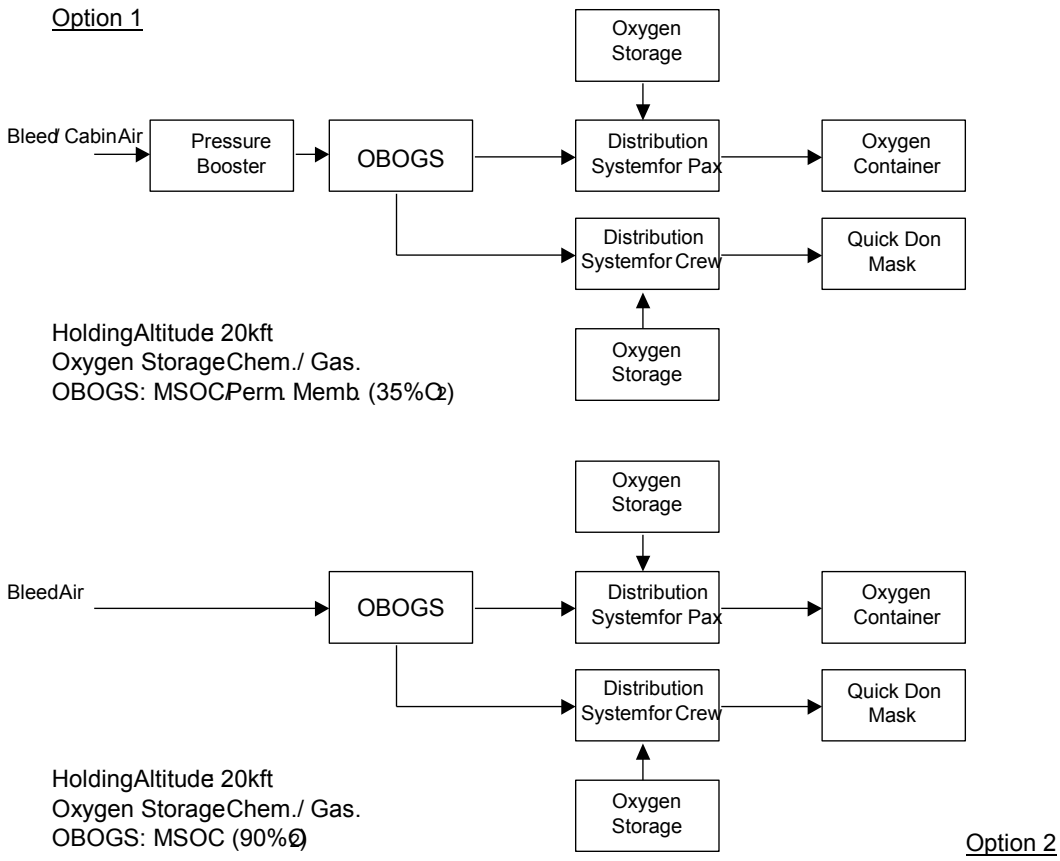

Option 1: Assuming a holding altitude of 20kft, the implemented OBOGS would need a pressure booster pressurizing the process air (>4barg) to produce the required oxygen flow (Permeable Membrane/MSOC). The OBOGS gives the breathing gas to the distribution system with less pressure (4barg). The assumed distribution system for passengers needs some modification: main supply lines 1”, riser lines 1" and 1" riser line shut off valves. The oxygen container with 0,6mm orifice, no sharp bends and 2,5mm manifold is sufficient to provide the required flow to the passengers. The distribution system used for the crew needs some more discussion regarding to the lower inlet pressure of the quick don masks. Additionally the masks itself need modification. The oxygen required for emergency descent is generated with a centralized chemical system or taken with in high pressure cylinders.

Option 2: Assuming a holding altitude of 20kft, the implemented OBOGS produces the required oxygen flow (MSOC) without a pressure booster using bleed air with a pressure of 1845psig. The OBOGS gives the breathing gas to the distribution system with less pressure (14,5psig). The assumed distribution system for passengers is not changed. The standard oxygen container with 0,6mm orifice is sufficient to provide the required flow to the passengers. The distribution system used for the crew needs some more discussion regarding to the lower inlet pressure of the quick don masks. Additionally the masks itself need modification. The oxygen required for emergency descent is generated with a centralized chemical system or taken with in high pressure cylinders.

6. Appendix

6.1 Literature

[1] Demoratz, Elisabeth A., SAE (Society of Automotive Engineers) Aerospace, AIR825/6 – On Board Oxygen Generating Systems (Molecular Sieve), AIR82561.DOC, March 1997, Page 4-7

[2] Dr. Bricard, Patrick, On Board Oxygen Generating System (OBOGS) – State of development for use in civil aircraft, Technical Note ESF1-231/99, Issue 1 `99231`.doc., Hamburg, April 1999

[3] Dr. Bricard, Patrick/ Sutton, Marcus, System Requirement Document (SRD) On Board Oxygen Generating System A340-500/-600, Issue 1, Hamburg, June 2000

[4] IS 32 skh, Lufthansa Technische Schule – Training Manual, Flugzeugkunde 4.10 Sauerstoffanlagen, Issue 03.85, März 1984

[5] Lutterbeck, Gaseous Oxygen System A330/ A340, Issue 1 TK614-555/90, Hamburg , August 1990

[6] Miller, R.L./ Ernsting, J., Advanced Oxygen Systems for Aircraft, AGARD-AG-286, 1996

[7] Plath, D./ Figgen, A.,in: Verkehrsflugzeuge, „Der schwierige Weg zur Airbus Industrie“, Weltbild Verlag GmbH, Augsburg, 2000

[8] Prof. Dr. med. Renemann, H., Flugmedizin, Institut für Flugführung, Braunschweig

[9] Ph. D. Roettger, Belinda F., Oxygen Purification and Compression Capabilities of Ceramic Membranes, Safe Journal, Vol. 22, No. 3, May-June 1992

[10] Schmidt, W., Sauerstoff Grundlehrgang, Flight and Maintenance Training, Deutsche Airbus, Issue BP323/WS/04.91, April 1991

[11] TE614, A330/ 340 Passenger Oxygen System,TE614/164/88 (Appendix to TE614/495/87), Hamburg, March 1988

[12] w.a., Dräger Sauerstofflehrgang, Dräger AG Aerospace, Lübeck

[13] w.a., Grundwissen des Militärfliegers, Militärverlag der DDR, 1989

[14] w.a., United Technologies Hamilton Standard, On Board Oxygen Generating System Concepts for On-Top-Systems, On-Line-Systems, Hybrid-Systems, Issue A-DS107, Windsor Locks, USA, October 1993, Page 4-7

[15] w.a., VALCOR Engineering Corporation, Permeable Membrane Systems (Merchandising Brochure), 1994

6.2 Conversion Tables

Table 20: Conversion of Length

Length					
from/to	mm	m	km	in	ft
mm	1	1000	1000000	0.03937	0.003281
m	0.001	1	1000	39.37	3.281
km	0.000001	1000	1	39370	3281
in	25,4	0,0254	0.0000254	1	0.08333
ft	304,8	0.3048	0.0003048	12	1

Table 21: Conversion of Volume

Volume					
from/to	qu ft	qu in	cm^3	dm^3	m^3
qu ft	1	1728	28320	28.32	0.02832
qu in	0.0005787	1	16.39	0.01639	0.00001639
cm^3	0.00003531	0.061024	1	0.001	0.000001
dm^3	0.035315	61.024	1000	1	0.001
m^3	35.315	61023,7	1000000	1000	1

Table 22: Conversion of Pressure

Pressure					
from/to	psi	inHg	mmHg (Torr)	mbar	Pa
psi	1	2.036	51.715	68.948	6894.76
inHg	0.4912	1	25.4	33.864	3386.39
mmHg (Torr)	0.01934	0.03937	1	1.333	133.3
mbar	0.014504	0.02953	0.7501	1	100
Pa	0.000145	0.0002953	0.0075	0.01	1

6.3 Laws and Legal Provisions

The following airworthiness requirements including associated ACs, ACJs and AMCs are applicable for the development, documentation and qualification of an OBOG system:

FAR (Amdt. 92)/JAR (Change 14) – Part 25 „Airworthiness Standards: Transport Category Airplanes"

Subpart C – Structure

§ 25.0561 (a),(c):	Emergency Landing Conditions – General

Subpart D – Design and Construction

§ 25.0789 (a):	Personnel Cargo Accommodations – Retention of items of mass in passenger and crew compartments and galleys
§ 25.0853 (a):	Fire Protection – Compartment interiors (AC)
§ 25.0863 (a),(b):	Fire Protection – Flammable fluid fire protection
§ 25.0869 (a),(c):	Fire Protection – Fire Protection: systems (ACJ)

Subpart E – Power Plant

§ 25.903 (d1):	General – Engines (ACJ)

Subpart F – Equipment

§ 25.1301 (a)-(d):	General – Function and installation (ACJ)
§ 25.1309 (a)-(d),(g):	General – Equipment, systems, and installations (AC,ACJ,AMJ)
§ 25.1322 (a)-(d):	Instruments: Installation – Warning, caution, and advisory lights
§ 25.1431 (a),(c):	Miscellaneous Equipment – Electronic Equipment
§ 25.1439 (b5):	Protective Breathing Equipment
§ 25.1441 (a)-(d):	Miscellaneous Equipment - Oxygen Equipment and Supply (ACJ)
§ 25.1443 (a)-(d):	Miscellaneous Equipment - Minimum mass flow of supplemental oxygen (ACJ)
§ 25.1445 (a)-(b):	Miscellaneous Equipment - Equipment standards for the oxygen distributing system (ACJ)
§ 25.1447 (a),(c1):	Miscellaneous Equipment - Equipment standards for oxygen dispensing units (ACJ)
§ 25.1449:	Miscellaneous Equipment - Means for determining use of oxygen (ACJ)

§ 25.1453 (a),(b): Miscellaneous Equipment - Protection of oxygen equipment from rupture (ACJ)

Subpart G – Operating Limitations and Information

§ 25.1541 (a),(b): Marking and Placards – General (ACJ)

Appendix F to part 25

Part I: Test criteria and procedures for showing compliance with § 25.853

JAR (Change 14) – Part 25

Subpart D - Design and Construction

§ 25.899: Miscellaneous - Electrical bonding and protection against lightning and static electricity (ACJ)

In addition, special conditions may be added to or substituted for requirements of the FAR/JAR – Part 25 if the product has novel technologies or unusual design features not covered or not yet recognised by the current requirements.

FAR- Part 91 (latest issue; not anchored in law)

§ 91.211 Supplemental Oxygen

FAR – Part 121 (latest issue)

Subpart K - Instrument and Equipment Requirements

§ 121.329 (a),(c): Supplemental oxygen for sustenance: Turbine engine powered airplanes

§ 121.333 (a),(e): Supplemental oxygen for emergency descent and for first aid; turbine engine powered airplanes with pressurised cabins

§ 121.335: Equipment standards

§ 121.337: Protective breathing equipment

JAR-OPS 1 (latest issue)

Subpart K - Instrument and Equipment

1.760 (a),(b),(c): First-aid oxygen (IEM)

1.770 (a),(b): Supplemental oxygen – Pressurised aeroplanes (IEM)

1.780 (a)-(e): Crew Protective Breathing Equipment

Appendix 1 to JAR-OPS 1770

International Standards

Technical standard order

TSO C64a: Oxygen Mask Assembly, Continuous Flow, Passenger

TSO C-78: Crewmember Demand Oxygen Masks

TSO C-89: Oxygen Regulators, Demand

TSO C-99: Protective breathing equipment

Applicable SAE documents:

SAE AS8010C:	Aviator's Breathing Oxygen Purity Standard

Recommended SAE documents:

SAE AIR 825:	Oxygen Equipment for Aircraft.
SAE ARP4754:	Certification Considerations for Highly-integrated and Complex Aircraft Systems.
SAE ARP4761:	Safety Assessment Guidelines for Civil Airborne Systems and Equipment.

Airbus Directives, Technical Design Directives and Air Transport Association

Air Transport Association:

ATA 35:	Oxygen System
ATA 100:	ATA System Breakdown

Airbus Design Directive:

ABD 100-D:	Equipment Design – General Requirements for Suppliers
ABD 200-C:	Requirements and Guidelines for System Designer
ABD 0021:	Equipment Software (Certification)
ABD 0027:	Interchangeability
ABD 0029:	Maintainability Requirements
ABD 0031:	Fire-worthiness Requirements
ABD 0036:	Numbering/Naming
ABD 0037:	Airbus Approved Abbreviation Handbook (AAAH)
ABD 0046:	Units of Measurement
ABD 0056:	Glossary of Airbus Terms & Expressions (GATE)
ABD 0065:	Ground Handling

Technical Design Directive:

TDD 35D001F:	Technical Design Directive: Oxygen System

Aircraft Standard Specification

The requirements are based on the Aircraft Standard Specification:
Long-Range - Family - Issue A – 30 Sep 1998

Reference for A340-500: F 000 05000 - Issue 1.1 - 30 Sep 1998
Reference for A340-600: F 000 06000 - Issue 1.1 - 30 Sep 1998

Betriebsordnung für Luftfahrtgerät (LuftBO)

§ 21:	Ergänzungsausrüstung, die durch äußere Betriebsbedingungen erforderlich ist

Durchführungsverordnung zur LuftBO (DVOLuftBO)

§ 17:	Allgemeine Anforderungen an die Sauerstoffversorgung
§ 18:	Sauerstoffversorgung für die Besatzung

§ 19:	Sauerstoffversorgung für die Fluggäste
§ 20:	Sauerstoffversorgung für den Notabstieg und Erste Hilfe bei Flugzeugen mit Druckkabine
§ 21:	Atemschutzgerät für die Besatzung

ETOPS (Extended Twinjet Operations)

Requirement list for extended operations (especially for aircrafts with two turbines)

LROPS (Long Range Operations)

Requirement list for extended operations for all aircrafts